Naomi Miller Lighting Design, LLC
46 23rd Street
Troy, NY 12180-1913 USA
518.272.2745 voice; 518.272.2953 fax
Email: naomi@nmlightingdesign.com Website: www.nmlightingdesign.com

UNIVERSITY AT ALBANY
LIGHTING MASTERPLAN

Table of Contents

UNIVERSITY AT ALBANY LIGHTING MASTERPLAN
July 23, 2008

1 EXECUTIVE SUMMARY

The University at Albany's Uptown and Downtown campuses have a proud history and architecture that is becoming classic. The University has a growing reputation for academic excellence. The lighting masterplan evaluates existing electric lighting and recommends changes that will support the architectural appearance, while delivering needed lighting quality with lower energy cost, reduced maintenance, and an eye toward long-term sustainability. The masterplan addresses safety, target lighting performance, recommended lamp and ballast technologies, fixture style and scale, NYSERDA programs that will help subsidize the cost of the improvements, and performance of the Blue Lights used for security.

Outdoor lighting is currently a combination of light sources and lighting styles. On perimeter roads and in parking lots, 400W lamps are used, and this delivers more light than needed, and excessive fixture brightness. This works against an environment that feels safe. A switch to a better quality metal halide lamp and ballast system is recommended, in 250W instead. When new, this system will look as "bright" and as safe as the older system that has decayed in light output, and it is important to change out all pole lights within an area within view, so that the newer system never looks "darker" than an adjacent parking lot, for example. When the entire campus is changed out to the 250W lamps in optically superior fixtures that reduce glare, it will look more uniformly bright and safe than it does now.

Around the perimeter of the Podium area on the Uptown campus, there are pole fixtures that sustain frequent damage from snowplows and deliver uneven orange-color light that can make the roadway look unsafe for pedestrians. The masterplan recommends a higher pole (16') with more decorative appearance, in 150W warm-white-light metal halide. Many pathways, especially those between Podium and Quads, look unsafe because of insufficient lighting. New lighting at more pedestrian scale (14') using warm-white 70W metal halide will help these paths look safer.

The Downtown campus and Alumni Quad also have orange-color light that lends a drab and forbidding appearance to the areas at night. Here the masterplan recommends a traditional-appearance post-top walkway fixture (14') and wall-mounted fixtures with better optics to minimize glare and the heightened-security-like appearance. Although the recommended fixture has a traditional acorn-glass appearance, it is optically sophisticated and reduces glare and skyglow using a very durable glass globe.

Elements that are original to the campuses and important to the ceremonial appearance should be restored, reworked to accept more energy-efficient and long-life light sources, and reinstalled. These include the exterior "Saucer Lights" and "Box Light" wall sconces

on the Uptown Podium, as well as the decorative exterior lanterns, torchieres, and pendants on the Downtown campus.

On the interiors, the masterplan recommends eliminating the inefficient and deteriorated original lighting in less visually prominent areas and replacing them with 4' long recessed fluorescent fixtures that efficiently brighten walls and improve light levels. This includes Uptown Podium Academic building corridors and the Downtown corridors and classrooms. However, in classrooms, laboratories, and offices, the masterplan recommends replacing the older suspended linear fluorescent boxes with new fixtures that have a similar appearance. These fixtures are more efficient than the old, so in many cases the length of the fixtures can be reduced to save energy.

Saucer lights and "Palm Lights" are important visual elements from the original Edward Durell Stone design on the Uptown Campus that should retained in areas that have ceremonial value. The Ballroom, Performing Arts Center, Library, and Campus Center are some of these areas. The Palm Lights were intelligently renovated in the 1990s, and are in good shape. The Saucer lights need to be sent out for reworking and restoration, as well as having their suspension lengths shortened somewhat to make them less obtrusive in the spaces. The 9' diameter saucers cannot be removed because they are too large, so they will have to be refurbished on site as best they can. In Dining Halls, the Saucers receive a lot of abuse and are cleaning problems. The masterplan recommends these be removed and restored for use in other areas of the campus. Do not destroy the saucers, because they are very expensive to reproduce.

On the Downtown campus, Dewey Library has been relighted with clusters of glowing bowl pendants that are stylistically inappropriate. The masterplan recommends restoring and reinstalling the original brass chandeliers that have been stored for over a decade. A reliable lift system will make these more accessible for relamping, but the incandescent lamping will be for decorative effect only. Other more efficient light fixtures will be mounted around the perimeter of the room to uplight the coffered ceiling, and fluorescent task lighting and dedicated bookstack lighting is recommended for mounting to desks and bookstacks.

The masterplan recommends lighting for many specific areas, both inside and out, for both campuses. Accompanied by a detailed fixture schedule and graphical fixture catalog information, it will be possible to upgrade lighting and make the campus much more responsive to the issues of sustainability and maintenance.

2 THE LIGHTING MASTERPLAN

2.1 INTRODUCTION

The Uptown Campus and the Downtown Campus of the University at Albany both have a long and proud history. They have significant architectural heritages, one from the early 20th Century, the other from the early 1960s. The intent of this Lighting Masterplan is to provide guidance for future work on both campuses, both for outdoor spaces and interior spaces.

The specific goals of the Masterplan are to

- Recommend renovation or replacement of lighting systems where needed, in order to provide a lighted environment for students, staff, and visitors that supports the visual activities on campus and minimizes visual discomfort and distraction
- Recommend lighting upgrades that support the appearance and architectural heritage of the two campuses, preserving important design elements where practical and possible
- Maintain or improve the current level of security on campus
- Address sustainability issues, and improve the University's compliance with "green" practices wherever possible and practical
- Reduce the different numbers of lamps used on campus
- Reduce maintenance costs on campus by installing lamps, ballasts, and light fixtures that are long-lived, durable and easy maintained when necessary
- Reduce energy use both for reduction of greenhouse gases and pollution associated with electrical power use, as well as reducing cost for the University
- Do the above with a minimum of interruption of activities, reasonable cost, and efficient use of staff and contractor time.

2.1.1 LIFESPAN OF THIS MASTERPLAN

Lighting technology is undergoing remarkable change. Sustainability goals are evolving from a noble pursuit to an urgent necessity because of accelerating global climate change and the rise in energy prices. Today's Masterplan cannot anticipate all future lighting equipment changes, trends, and social pressures. However, this Masterplan provides a solid direction for the next 10 years. The equipment presented here is a dramatic improvement in energy effectiveness and maintenance reduction compared to the lighting equipment specified in the 1960s through the 1990s, in many cases reducing energy use by 50% or more, and increasing lamp life by 3 to 10 times. None of the equipment recommended in this Masterplan will become obsolete in ten years. However, solid-state lighting technologies (LEDs) are likely to start becoming viable options by 2010 to 2015. This Masterplan is a guide for upgrading the original equipment, replacing some original equipment with more practical options, and a guide for design teams who are restoring or renovating existing buildings and sites on both campuses. Design teams

working on new structures should adhere to the lamp and ballast guidelines as much as possible. Any deviations should be to improve energy efficiency and equipment maintenance life only.

2.2 History and Appearance of the Two Campuses

2.2.1 The Uptown Campus - Important Historical Lighting Elements

The University at Albany uptown campus, designed in 1962 by Edward Durell Stone, has a distinctive modernist appearance. Nearly fifty years old, its graceful concrete columns, gentle curves and overhangs, are already being embraced as significant architecture. Edward Durell Stone was the architect of the original Museum of Modern Art in New York City and the Kennedy Center for the Performing Arts in Washington DC. We want to help celebrate The University at Albany's architectural heritage by preserving many of the original lighting elements: large suspended "saucer" lights; linear fluorescent slots at the tops of columns which recall palm tree fronds; and tall, rectangular "box lights" mounted on exterior facades to light pathways and the overhead canopies. These three lighting fixtures should be preserved and reused if possible, replaced with similar-looking products that produce better lighting or use fewer watts where the original fixture cannot be preserved, and located in places where they are most visible and meaningful.

Figure 1 - Uptown Campus - Interior of Podium Level

Figure 3 - Saucer Light

Figure 2 - Palm Lights

Figure 4 - Box Light

The following spaces are prominent visually or ceremonially. These are spaces where the campus should make an effort to preserve or reinstall original lighting elements:

- The main entry to the podium level from Collins Circle
- Exterior entry spaces to prominent podium buildings such as the Library, and the Campus Center
- Podium level lobbies in academic buildings
- The Performing Arts Center lobby
- The Gallery
- The Campus Center Ballroom
- The Campus Center Student Financial Aid student conferring area
- The Campus Center Student Accounts passageway
- Dormitory entries
- The Library

The attached plans show existing locations of the lighting saucers, “palm lights”, and the “box lights”, and proposed locations for the master plan. A key to the drawing shows 1st, 2nd, and 3rd priority in restoring or replacing the elements, based on how important the location for campus identity, how urgently the campus needs light in that location, and what condition the existing lighting is in.

These existing lighting elements are not always practical. For example, the “Saucer” lights are difficult to maintain, hang so low in places that tall students hit their heads on them, and the existing lighting technologies are inefficient and poor in color and lamp life and maintained light output.

The appearance of the lighting elements should be retained, but may be updated with more efficient light sources, and reconfigured with glass or coverings that make them less susceptible to dirt and debris. This will make them much easier to clean and relamp and less expensive to power. In most cases, the saucer suspension lengths can be shortened slightly to make them less of a hazard.

It is not practical to retain the lighting elements in all areas, so the intent of the locations indicated on the proposed plan will achieve the greatest visual effect with the least impact on maintenance, energy-efficiency, and different lighting needs.

2.2.2 DOWNTOWN CAMPUS AND ITS IMPORTANT HISTORICAL LIGHTING ELEMENTS

Draper Hall, Husted Hall, and Hawley Hall were opened in 1909 to accommodate State Normal College, which ultimately evolved into the University at Albany. These buildings (designed by Albert Randolph Ross and George Lewis Heins, State Architect) with classical Georgian style exteriors, have a mix of traditional interiors (such as the Dewey Library) and more contemporary classrooms and offices. The traditional lighting fixtures, such as decorative hanging lanterns or wrought iron wall sconces, should remain, updated with more efficient light sources. However, in classrooms and offices where computers or data projections are used, and in corridors where no historical architectural elements remain, it makes sense to provide lighting with efficient contemporary fixtures that will control direct and reflected glare while delivering useful light to desks and walls.

Milne, Page, and Richardson Halls were opened in 1929, designed by the State Architect, Sullivan Jones. The most notable space is Page Auditorium, with a simplified transitional interior style, straddling between classical and early art deco. This auditorium is an important space, hosting the downtown campus' large events, including graduation. Lighting improvements for this space should be made in conjunction with a restoration of the architecture, and should provide improved reading for the audience as well as more theatrical control options in order to provide better functionality as a theatre.

Figure 5 - Downtown Campus – Draper Hall

Figure 6 - Downtown Campus – Hawley Hall

Figure 7 – Page Auditorium Exterior

Figure 8 - Page Auditorium Interior

2.3 Outdoor Lighting Issues and Goals

2.3.1 Security and Safety

2.3.1.1 Exterior Areas

The National Crime Prevention Institute publishes *Crime Prevention Through Environmental Design* (CPTED)[1]. In it, the author notes, "lighting does make people feel safer, but most outdoor lighting has been installed with a confused set of objectives." He points out that many street lighting installations are designed with the needs of the driver, not the pedestrian in mind. Since cars have headlights, and since pedestrian safety is the primary objective, lighting should be designed primarily for the pedestrian. This is particularly true on a college campus where pedestrian travel is the primary means of getting around.

Several principles are involved:

- Lighting for pathways, parking lots, and roadways should be relatively uniform and similar, or else one area will look dramatically dimmer and less safe than another.
- We should avoid having dark alleys or areas blocked by walls, dumpsters or shrubs where criminals can hide or where victims can be hidden from view.
- White light from fluorescent and metal halide light sources generally make an area appear brighter than orange light from high pressure sodium sources. Also, color rendering is better, making it easier to identify faces and clothing.
- For a perception of safety, an individual should be able to see around him or her, at a distance sufficient for them to react to potential danger and run to a place of safety. That also means that doorways, blue light beacons, or other points of safety should be easily visible from a distance.
- Nighttime light fixtures should not be glaring, and should not deliver their intensity at an angle close to the pedestrians direction of view, or they will produce "scatter" in the eye. This haze is superimposed on the visual image, washing it out, making it MORE difficult to see dangerous objects or people. High intensity light from light fixtures should be avoided unless the light is mounted so high that it is 60 degrees or more above the pedestrian's direction of view. This is one argument for taller poles.

We know that lighting cannot eliminate crime, or there would be no crimes committed during the daytime. However, we can use lighting to make criminals more visible and give them fewer places to hide, and give potential victims more opportunities to get away from the criminal. In some cases we want to discourage pedestrians from using pathways because they are inherently unsafe. We can use signage, campus warnings, and actually eliminate lighting so that the path does not look artificially safe.

[1] Crowe, Timothy D. *Crime Prevention Through Environmental Design*, 2nd Edition. National Crime Prevention Institute, University of Louisville, 2000.

2.3.1.2 Indoor and Podium Areas

Crime Prevention Through Environmental Design also mentions that bright walls and a darker center of a room are preferable to a central brightness and dark walls because it feels safer and larger. Occupants tend to walk in the brighter areas of the room, so bright walls encourage people to spread out and fill the entire space. This can be applied to outdoor lighting as well. Providing light on facades of buildings can improve the perception of safety.

2.3.2 SUSTAINABILITY

Sustainability of lighting encompasses many issues: energy use because of power generation impacts on air quality and global climate change; use of materials because of their embodied energy, toxic by-products of mining, manufacturing and transportation, and light's unintended negative impact on flora, fauna, and human biology. The unwanted consequences of outdoor lighting include three main issues: Light Pollution (Sky Glow), Light Trespass, and Glare.

Issues for indoor applications are similar, and include access to daylighting, reducing energy use, minimizing use of toxic materials, using materials that can be recycled or remanufactured at end of useful life, and using local materials to minimize transportation costs and environmental damage from fossil fuel use. Most important of these for lighting is reducing energy, because this contributes so heavily to environmental damage.

2.3.2.1 ENERGY USE

"Power" is measured in Watts, while "Energy" is measured in Kilowatt-Hours. "Energy" is power, measured over time. The University at Albany is billed for its electrical use in an odd way, given its size for the Utility providing the power. It probably should be billed as a more traditional large customer, with a Demand charge that applies a per-KW charge at the monthly peak of usage, plus a Usage charge per kWh that varies according to the time of use. Mid-day use during the summer and winter, when the electric utility is straining to keep up with demand is usually the most expensive usage charge, with late evening use being very inexpensive. For significant cost savings, the University at Albany should renegotiate its electrical rate structure.

Shutting off lights when not needed, reducing usage to only the amount of light needed, and using energy-efficient lighting products are the three principal ways to reduce campus energy use. Reduced energy use in turn reduces environmental pollution, resulting damage to the environment and human health, and reduces the need to build costly power plants.

2.3.2.2 LIGHT POLLUTION, LIGHT TRESPASS, AND GLARE

Light Pollution (Sky Glow) is unwanted stray light in the atmosphere from light emitted directly upward by luminaires, or reflected from the ground. Particles in the air scatter the light, creating a glowing haze above a city or site. This light pollution is both a waste of energy because it serves no purpose, and it diminishes the ability of people and astronomical instruments to observe the night sky. Furthermore, light pollution and stray light disrupt the migration pattern of birds and can negatively affect the survival of frogs and sea turtles.

Light pollution can be minimized by using the lowest wattage lamps that achieve the target light levels, and by selecting luminaires (light fixtures) that emit minimal, if any, light directly upward.

Light Trespass is light emitted toward neighboring properties where it is not wanted. Sometimes this light enters bedroom windows, making it difficult for people to sleep, and sometimes it becomes a distracting or annoying patch of brightness seen from a distance. It is a problem in urban areas, especially in mixed areas between commercial and residential spaces. Wallpacks (lensed wall fixtures that emit a lot of horizontal light, such as the fixture shown below) are the single biggest culprit for Light Trespass, although pole-mounted parking lot or sportsfield lighting fixtures can cause problems also.

Light trespass can be minimized or eliminated through the careful selection, location, and aiming of luminaires. It is important to choose luminaires that direct their light away from neighboring properties.

Glare is created when a light source is very bright relative to its background. It can be distracting or uncomfortable (called "Discomfort Glare"), or can interfere with a driver or pedestrian's ability to see clearly. The latter is called "Disability Glare" or "Veiling Glare" and is very dangerous.

Glare can be reduced by choosing luminaires that direct light only where it is needed. By shielding the excessive brightness of the lamp or optical system from important viewing angles, we can improve the clarity of seeing for both the driver and pedestrian.

Figure 9 - Typical glaring "wallpack" fixture

2.3.2.3 LEED®

Leadership in Energy and Environmental Design (LEED®) is a program through the United States Green Building Council (USGBC) that has established goals for sustainable projects. This report will outline the goals for the University at Albany's lighting.

2.3.2.3.1 Lighting Zones and Responsible Outdoor Lighting

LEED® Sustainable Sites Credit (SS8: Light Pollution Reduction) aims to reduce light pollution and impact on the nocturnal environment. This is accomplished by restricting the light leaving the interiors of buildings on the site, limiting light trespass, and limiting upward light.

The LEED® rating system classifies projects according to the following light zones: LZ1 – Dark (Parks and Rural Settings), LZ2 – Low (Residential), LZ3 – Medium (Commercial/Industrial, High-Density Residential), and LZ4 – High (Major City Centers, Entertainment Districts). The University at Albany qualifies as LZ3 and the following are the LEED® requirements for this zone.

LZ3 — Medium (Commercial/Industrial, High-Density Residential)

Design exterior lighting so that all site and building mounted luminaires produce a maximum initial illuminance value no greater than 0.20 horizontal and vertical footcandles at the site boundary and no greater than 0.01 horizontal footcandles 15 feet beyond the site boundary. Document that no more than 5% of the total initial designed fixture lumens are emitted at an angle of 90 degrees or higher from nadir (straight down). For site boundaries that abut public rights-of-way, light trespass requirements may be met relative to the curb line instead of the site boundary.

The IESNA Luminaire Cutoff Classifications describe the light distribution of outdoor fixtures as Non Cutoff, Semi-Cutoff, Cutoff, and Full Cutoff. Fixtures with the IESNA classification of Full Cutoff meet the LEED® requirement because no light is emitted at or above 90º. A few fixtures classified as IESNA "Cutoff" can also meet this LEED® requirement. (Note: The IESNA is in transition between using the "Cutoff" classifications and a new system called the Luminaire Classification System (LCS). This report will use both systems until the new system is fully published and in wider use.)

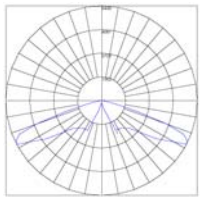

The image at right is a polar graph representing the photometric distribution from a sample Full Cutoff luminaire. The center of the graph represents the lighting fixture and the curved outline shows the relative intensity of the light emanating from it. 0° is the bottom center of the graph (and towards the ground in application), while 180° is a line straight upward from the light fixture. The horizontal line radiating from the center is 90°. Light emitted in the 75°-90° range is often perceived as glaring. Light emitted above 90° contributes the most to light pollution.

In addition to the exterior requirements, the LEED® credit limits the amount of light leaving the interior of the building at night. While daylighting a building reduces energy use during the day, after dark the glazing allows light to pass through it in to the surrounding site or into the night sky. The credit requires the lighting to be automatically shut off during non-business hours, or requires that the interior luminaires not direct their maximum luminous intensity (candlepower) through any of the glazing.

2.3.2.4 Other Sustainability Issues

2.3.2.4.1 Dark Skies

The International Dark-Sky Association (IDA) strives to preserve the beauty, wonder, and scientific resource of the night sky. It offers a voluntary rating system for outdoor luminaires. Manufacturers can submit their product performance data to the IDA for an evaluation of light pollution potential. Approved products receive a Fixture Seal of Approval (FSA), allowing the product to be advertised as IDA-Approved™ dark sky friendly product. Since this program is relatively new and voluntary, not all outdoor lighting manufacturers seek the FSA. However, all luminaires recommended for use at the University at Albany will meet the goals of the IDA's FSA.

2.3.2.4.2 Controls

Another good idea for reducing light pollution and unnecessary energy use is turning off outdoor lighting after a business has closed, or reducing lighting levels late at night when there is less traffic in roadways and parking lots. Some businesses have a full evening shift staff that fills the parking lots, but the late-night shift is a reduced staff. College campuses are used 24 hours a day, and although the number of students and staff using walkways and parking lots late at night is reduced, we hesitate to recommend shutting off lighting altogether. There are places where lighting could be shut down to half level late at night, however. These are: accessible exterior sports facilities such as running tracks, tennis courts or soccer fields, and perimeter parking lots that are nearly empty at night.

2.3.2.4.3 Green Principles, including toxicity and component materials -

The University at Albany is a progressive institution, a leader in environmental consciousness and science, and can be a strong example to other institutions, governments, and private businesses in the Capital Region. It follows that the luminaires installed on the site should follow "green" principles. As an example, we recommend avoiding products that use polycarbonate and ABS materials because they can have toxic implications in manufacturing or in use. Although LEED® certification standards do not ban these materials, it discourages their use.

Mercury is a heavy metal that can be toxic to humans and animals. Almost all conventional light sources except for incandescent lamps use tiny amounts of mercury as an integral part of the light production. While this sounds frightening, the alternative is worse. Fluorescent and metal halide lamps are far more efficient than incandescent or even LED light sources at this point in time, so they use much less power. If we were to revert to incandescent lamps and LED light sources for all light production, we would be doubling to quadrupling our energy use, which would result in far greater production of hazardous mercury through fossil fuel power plant emissions. At this point in time it is impractical to completely eliminate mercury from lamps, so we recommend using lamps that exhibit long life, low mercury content, and excellent energy efficiency. We also recommend recycling spent lamps, so that mercury can be recycled and kept out of waste streams where they could cause environmental damage.

Lead, PVC, and Teflon are all materials that are either being removed from products or greatly reduced. In luminaires, lead can be most often found in old magnetic ballasts and in the solder of circuitry. Lead has been almost completely removed from lamps and ballasts at this point in time. PVC and Teflon are found around wiring and electrical components. Fixtures selected for the site will be lead and PVC-free and Teflon-free if possible.

Green principles encourage the use of reducing material use, reusing materials, and recycling materials at the end of their useful life. The intent of LEED® credits 4.1 and 4.2 (Recycled Content) is to increase demand for building products that incorporate recycled content materials, thereby reducing impacts resulting from extraction and processing of virgin materials.

Outdoor light fixtures and poles, as well as interior lighting fixtures, principally use steel and aluminum for their durability. Steel and aluminum can be recycled at the end of their useful life. At this point in time, few lighting products on the market promote their recycled content. As specifiers for LEED® projects, we are encouraging manufacturers to consider

- increasing recycled content of their products
- designing products for disassembly (i.e. when product reaches end of life, the various parts can be easily separated for recycling or reuse)
- recyclable or biodegradable packaging, and
- responsible production processes.

2.3.2.4.4 Local manufacturing

The LEED® rating systems offers points for using a specific portion of materials that were manufactured (defined as manufacturing completed) within a 500 mile radius of the project site. This reduces the greenhouse gases generated through transporting goods long distances, and works to strengthen local economies. Credits MR 5.1 and 5.2 of the LEED® Materials and Resources section explicitly exempt mechanical, electrical, and plumbing (MEP) equipment from this requirement. In the spirit of this credit, however, manufacturers within a 500-mile radius of Albany NY will be in the first tier of considerations for The University at Albany.

2.3.2.4.5 On-site Renewable Energy and Photovoltaic-powered lighting

LEED® Credit EA2 encourages the development and use of products that have integral power supplies, reducing the burden on the electrical grid. There are some outdoor lighting products with integral photovoltaic panels on the market. Unfortunately these products are very expensive and have exhibited significant field problems, so we do not consider the technology sufficiently mature or reliable for use at the University at Albany except for demonstration purposes. Fortunately, nighttime lighting is seldom a significant load on the electrical grid when the grid is strained, perhaps with the exception of very cold winter days between 4:30 and 5:30 pm. However, we would encourage installing photovoltaic panels at the University at Albany that feed back to the electrical grid. These seem to be more effective than photovoltaic systems tied to outdoor lighting at this point in time.

2.3.3 LIGHTING PERFORMANCE - OUTDOOR

When lighting is changed or added to the campus, we want it to perform well, providing the lighting levels and quality of light that helps students, faculty, staff, and visitors to perform the visual work that helps them gather information about their environment or task. This translates to seeing moving and parked cars, faces and gestures of people around them, signage, edges of sidewalks and stairs and roadways, blue light beacons, pedestrians in a crosswalk, ice on pavement, etc. Because there are so many different types of visual tasks and spaces, the criteria for good quality lighting will vary. Target illuminances (footcandles), uniformity ratios, energy limits, and other criteria are derived from Illuminating Engineering Society of North America (IESNA) standards, the National Fire Protection Association (NFPA), and the New York Energy Conservation Code (NYECC).

It is important that new or replacement fixtures be durable, easy to maintain, and energy-efficient, because an installation that lasts a long time and is inexpensive to operate is also more economical in the long run.

Good lighting practice for outdoor nighttime visibility includes:

- providing enough light to help users see important details in an area
- providing sufficient lighting uniformity that important details in the darker areas can still be seen
- minimizing disabling glare for pedestrians and drivers, and
- avoiding excessive brightness that can temporarily blind users as they move from brighter areas to darker areas.

It is important to understand that the human visual system can see in bright sunshine and also in moonlight, but not at the same time. It takes time for the visual system to adapt to brighter or lower light levels. In general, it is only able to see details within a range of 100 to 1 in luminance (measurable brightness), and without careful design, nighttime environments can easily exceed this range by 10 or 100 times. The result is that excessively bright luminaires, walls, or signs can make it difficult or impossible for users to see a patch of ice on the sidewalk or a deer darting out across the roadway.

2.3.3.1 WHEN TO LIGHT, WHEN NOT TO LIGHT

Balancing the need for nighttime lighting with the goal of reducing energy use and light pollution is tricky. The best practice is to put light on roadways in places that have the highest potential for vehicle/vehicle conflict or vehicle/pedestrian conflict. At the University at Albany, we suggest limiting roadway lighting to conflict areas (crosswalks and intersections). Vehicle headlights will supply needed illumination between poles. This meets the LEED® goals for reducing energy consumption and material consumption (SS8, Energy Performance Credit EA1).

Parking lots pose greater potential for pedestrian/vehicle conflict and vehicle/vehicle conflict, so these are traditionally lighted more uniformly. Similarly, we propose illuminating walkways with a regular spacing of poles in order to improve the perception of safety for pedestrians.

Building facades and signage can be considered for lighting also, but we would recommend achieving nighttime visibility with lighting techniques that provide lines or dots of light (for example) to highlight key architectural details, instead of washes of light on large surfaces. This reduces energy use as well as light pollution.

Landscape lighting can accentuate exterior plantings while providing wayfinding and a psychological sense of brightness. Too often, landscape lighting equipment uses high wattage sources, but it takes very little wattage (and lumens) to get a dramatic effect, if the landscape lighting is carefully done. Landscape lighting that relies primarily on downward lighting from trees or building eaves can be combined with small amounts of uplight to achieve this effect. We recommend allowing the building owner to implement limited areas of landscape lighting, but that it be limited to 20W maximum light sources (1400 lumens per lamp, maximum).

2.3.3.2 LIGHTING UNIFORMITY AND TARGET LIGHT LEVELS (ILLUMINANCE)

Uniformity - Roadways and parking lots need relatively uniform lighting in order to ensure no areas look dangerously dark. Different IESNA committees define lighting uniformity differently. Sometimes it is the ratio of the average pavement illuminance to the minimum illuminance; sometimes it is the maximum pavement illuminance to the minimum illuminance. The specific ratio and value depends on the application (roadway, parking lot, pedestrian pathway).

Car headlights provide supplemental illumination to parking lot and roadway lighting. Objects/items illuminated by the headlights stand out relative to the background brightness.

Illuminance - is the amount of light (lumens) falling on a given area and is measured in footcandles in English units (in SI Units, it's measured in Lux). The Illuminating Engineering Society of North America (IESNA) and related subcommittees publish Recommended Practices (RP) and a Lighting Handbook that contains illuminance guidelines. The tables below list the recommended illuminance and uniformity ratios recommended by the IESNA. [2] (E_{avg} = Average Illuminance; E_{min} = Minimum Illuminance)

The following table summarizes the lighting standards for exterior spaces, relevant to the University at Albany:

[2] Note: Instead of illuminance, the IESNA recommends using roadway "luminance" as a metric for roadway lighting, as well as a metric for veiling luminance. For simplicity we are showing the illuminance standard, but also following IESNA light distribution principles for reducing veiling luminance and reflected glare from the roadway to ensure quality lighting for the driver.

Space Type	Work-plane Ht.	Uniformity Ratios	Avg. Horiz Illum (fc)	Min Horiz Illum (fc)	Min Vert Illum (fc) at 5' ht	W/SF from NYS Code	Publication Source
Exterior							
Parking lots, Uptown Campus	0'	20:1 max/min	1-2	0.2min	0.1min	*	IESNA RP-20-98 Table 1, Basic Security
Parking lots, Downtown Campus	0'	15:1 max/min	1-3	0.5min	0.25min	*	IESNA RP-20-98 Table 1, Enhanced Security
Walkways, Podium level	0'	4:1 avg/min	1		0.5	*	IESNA RP-8-00 Table 5, Pedestrian only
Walkways, Downtown Campus	0'	4:1 avg/min	2		1	*	IESNA RP-8-00 Table 5
Walkways between academic bldgs & dorms, Uptown Campus	0'	4:1 avg/min	0.5		0.2	*	IESNA RP-8-00 Table 6
Lighting for perimeter academic buildings, Uptown Campus	0'					*	See walkways and covered entries
Lighting around support buildings, Uptown Campus	0'					*	See walkways and covered entries
Covered building entries	0'		5		3	*	IESNA Handbook Chap.10 LDG**
Exterior stairs	0'		1		0.3	*	IESNA Handbook Chap.10 LDG**
Interior roadway/pedestrian area	0'	4:1 avg/min	2		1	*	IESNA RP-8-00 Table 5, Mixed Vehicle/Pedestrian
Roadside sidewalks and bikeways	0'	10:1 max/min	0.5		0.5	*	IESNA RP-33-99
Roadways, Collector (Collector roads are the main roads around the site and local roads feed off the collector to the individual parking lots. Typical "R3" asphalt pavements are assumed.)	0'	4:1 avg/min	1.2			*	IESNA RP-8-00, Table 2, Collector, High Pedestrian Conflict
Roadways, Local (Collector roads are the main roads around the site and local roads feed off the collector to the individual parking lots. Typical "R3" asphalt pavements are assumed.)	0'	6:1 avg/min	0.9			*	IESNA RP-8-00, Table 2, Local, High Pedestrian Conflict
Loading docks, active	0'		10		3	*	IESNA Handbook Chap.10 LDG**
Loading docks, inactive	0'		1		0.3	*	IESNA Handbook Chap.10 LDG**
Storage yards, active	0'		10		3		IESNA Handbook Chap.10 LDG**
Storage yards, inactive	0'		1		0.3		IESNA Handbook Chap.10 LDG**
Fountain and pond			N/A		N/A	*	
Sportsfields - Soccer	3'	2.5:1 or less	150			*	IESNA Handbook, 9th Ed., Chapter 20-2
Sportsfields - Lacrosse	3'	2.5:1 or less	50			*	IESNA Handbook, 9th Ed., Chapter 20-2
Sportsfields - Football	3'	2.5:1 or less	50			*	IESNA Handbook, 9th Ed., Chapter 20-2
Sportsfields - Field Hockey	3'	2.5:1 or less	50			*	IESNA Handbook, 9th Ed., Chapter 20-2

* Minimum light source efficacy of 45 lumens per Watt
** LDG = Lighting Design Guide of IESNA 9th Edition Handbook, Chapter 10
IESNA = Illuminating Engineering Society of North America
RP-8 = IESNA Recommended Practice for Roadways, 2000
RP-33 = IESNA Recommended Practice for Exterior Environments, 1999

Figure 10 - Target Lighting Metrics for Exterior Spaces

Glare for drivers and pedestrians - Glare is experienced when drivers are moving toward a luminaire that is emitting a high intensity of light toward the drivers' eyes. The most potentially glaring angles of light emitted from a luminaire are between 75 and 90 degrees above nadir, or the candelas emitted close to horizontal. Called "Veiling Luminance", these angles of light can superimpose a "veil" of light across the visual image, reducing the driver's ability to see details. These candela angles also cause reflected glare on wet or icy roadways, which obscures the roadway surface. We avoid glare by choosing luminaires that emit most of their light between 0 and 75 degrees, and almost no light from 80 to 90 degrees. This will be a criterion for selecting the University's site lighting luminaires. We will also avoid luminaires that emit IESNA Type I or Type II light distributions, because these produce the worst direct glare and veiling glare for the driver.

Glare for the pedestrian is a different issue. Although high-angle glare is disabling for the pedestrian as well, he or she can also be annoyed by the brightness of the lamp's bright arc tube visible from viewing angles well below the 75 degree angle. We can reduce the perception of glare for the pedestrian by using a softening prismatic lens or slight frosting of the lens below the lamp. This spreads out the brightness over a larger area and makes it more comfortable for the pedestrian. However, this also reduces the wide spread of the optical system, so it can lead to reduced uniformity of light. This is a tradeoff that needs to be considered in walkway or running path lighting.

2.3.3.3 NON-LIGHTING STRATEGIES FOR IMPROVING SAFETY

Lighting is one method for improving safety; but non-visual strategies also work well. The intersections might have the recommended illuminance, but rumble strips could be more effective in slowing drivers as they enter the intersection, thereby making the intersection safer.

Contrast is the single most important aspect of nighttime visibility. Without sufficient contrast, the amount of lighting must be increased to make the object more visible. Objects, words, people…. everything is more visible as its contrast against the background increases. White painted crosswalk stripes against black pavement are highly visible, for example. High-contrast markings, possibly using retro-reflective paints or similar materials can make the edges of roadways more visible than overhead lighting can.

2.3.4 OUTDOOR ENERGY PERFORMANCE

2.3.4.1 ENERGY AND POWER CODES AND RECOMMENDATIONS

Here are the current exterior lighting requirements from the ***New York State Energy Conservation Code*** **(NYECC 2002)**

- Minimum lamp efficacy of 45 lumens per watt
- Exception for low-voltage landscape lighting
- Exception for historical, safety, signage or emergency considerations

Figure 11 lists the maximum allowed exterior lighting power from the ***ANSI/ASHRAE/IESNA Standard 90.1-2004***, which might point to future New York State code requirements. Credit SS8 of the *LEED® 2.2* rating system permits only 80% of the lighting power densities for exterior areas and a 50% for facades allowed by Standard 90.1-2004, and that is listed in the right hand column.

Figure 11 - Maximum Allowed Power for Exterior Lighting, per ASHRAE/IESNA St. 90.1-2004 and LEED® 2.2

Application	Location	Max. Std. 90.1 2004	Max. LEED®
		Unit Power Density	Unit Power Density
Uncovered Parking Areas	Parking lots and drives	0.15 W/ft^2	0.12 W/ft^2
Building Grounds	Walkways less than 10' wide	1.0 W/lf	0.8 W/ft^2
Building Grounds	Walkways 10' wide or greater, plaza areas, special feature areas	0.2 W/ft^2	0.16W/ft^2
Building Grounds	Stairways	0.15 W/ft^2	0.12W/ft^2
Building Entrances and Exits	Main entries	30W/lf of door width	24W/lf of door width
Building Entrances and Exits	Other doors	20W/lf of door width	16W/lf of door width
Canopies and Overhangs	Freestanding or attached to buildings	1.25 W/ft^2	1.0W/ft^2

The International Energy Conservation Code (IECC) currently has no exterior lighting requirements or limitations.

Title 24 is the name of California's Energy Code. Although this code does not apply to the University at Albany, it is worthwhile reviewing because California often leads the

nation in lighting energy legislation. New York, being the third most populous state in the country, at some point may adopt some of its principles or strategies.

Title 24 allows different ambient illumination according the site location lighting zone, as described by the US Census Bureau.

A recent revision to Title 24 requires that a lighting installation be capable of reducing its light level by half after a business' normal operating hours or after a curfew time. The purpose of the Lighting Curfew is to reduce energy consumption when the site is less occupied, while preserving some level of safety and security.

This can be accomplished via three methods. If there are two fixtures per pole lighting the same area, one fixture can be switched off at curfew. This method should produce the same uniformity as before, but half the light and half the power use. A second method is to specify a single fixture with two lamps in the optical system that can be separately switched. This strategy is less desirable because the double lamping negatively affects the optical performance. The final method uses a continuous dimming or stepped-dimming ballast. The major drawback to this strategy is that ballasts do not reduce power linearly as the light output is reduced. (For some HID ballasts, when the light output reduced to half, the power use is still ¾ of the full power draw.)

2.3.4.2 ENERGY VS. POWER

Energy is the product of power times time. Energy codes (IECC, NYECC, Std. 90.1) all limit the total connected *power* load in a building or on a site, but do not actually limit *energy* use. For the most part, the site lighting will operate at night during off-peak utility hours when electric rates are low. Even so, we want to minimize energy use by reducing the number of hours lighting fixtures operate, and switching them off as much as possible when no one is around to use the lighting. Lighting controls dim or switch off lighting, and save energy.

2.3.4.3 LIGHTING CONTROLS

There are three major types of controls for outdoor site lighting: motion sensors, photosensors, and astronomical timeclocks.

Motion sensors work well for incandescent lamps where the light can be instantly turned off and on. Metal halide and high pressure sodium lamps need several minutes to warm up to full output, and if extinguished and restruck, will not emit any light for several minutes. Even fluorescent lamps require a warm-up period before reaching full output. As a result, motion sensors are less practical for these more efficacious lamps.

Photosensors monitor the amount of daylight and automatically switch lights on or off accordingly. Some photosensors have to be commissioned to operate properly, and may operate poorly if never commissioned. All photosensors need to be kept clean of dirt, leaves and tree branches, since these can block the diode, fooling the photocell into switching the luminaire on prematurely.

Astronomical timeclocks turn on lights at a programmable time or a seasonally variable time such as dusk or dawn. Latitude and longitude information for the site is input into the timeclock that then can calculate sunset and sunrise. The timeclocks can handle many events, meaning that it can turn off a group of lights at one time and another group at another time, plus it can have a different schedule for weekends and holidays. Timeclocks are usually more effective than photosensors because they are not affected by environmental conditions.

At the University at Albany, the roadway lighting would probably operate dusk to dawn, using a photosensor control. Parking lot lighting would use an astronomical time clock to switch on lights at dusk, switch off some of the parking lot lighting late in the evening, perhaps switch off altogether late at night, and switch back on early in the morning on winter days. Pathway lighting may be controlled by the same astronomical time clock, but on a different schedule according to the needs of the individual site tenant.

2.3.5 OUTDOOR LAMP TECHNOLOGY – CRITERIA FOR LAMP AND BALLAST SELECTION

2.3.5.1 COLOR OF LIGHT

There are two metrics commonly used to identify light source color: Correlated Color Temperature (CCT) and Color Rendering Index (CRI). CCT refers to the color of light emitted by the lamp, addressing only whether the light is orange-white (2000-2800K), warm-white (2800K to 3300K), neutral-white (3300K-3800K), cool-white (3800K-4500K), or blue-white (4500K-7000K). This metric doesn't address how well the light renders colors, however. CRI is a rough metric that rates color rendering on a scale of approximately 0 to 100. CRIs of 80 or greater are usually considered very good, CRIs of 50 or lower are considered poor. Ideally we would like to use lamps that render colors well so that foliage, signs, and clothing are identifiable and pleasing to view.

High Pressure Sodium (HPS) is used in some parking lots on campus, and immediately around the perimeter of the podium area. HPS has an orange-amber appearance and does not convey the clean and progressive appearance that whiter lamps can. We recommend that the HPS lamps be changed out to metal halide or compact fluorescent in order to maintain a single color of light on the campus for cohesiveness.

2.3.5.2 EFFICACY OF LAMPS

"Efficacy" refers to the efficiency of light sources in producing light output (lumens) per unit of power (Watts). Lamp efficacy is communicated in terms of lumens per Watt (LPW). The lumen is the basic unit of visible light, and it is based on the human eye's daytime color sensitivity. At night, the human eye sensitivity shifts from being most sensitive to the yellow-green portion of the color spectrum toward the blue-green portion of the spectrum. So, it is not entirely valid to rate lamps for outdoor use using "daytime" lumens.

At night, it is extremely important to see objects and movement in your peripheral field of view, not just your central vision. The retinal periphery is more sensitive to the blue portion of the spectrum at night, and research is suggesting that blue-rich light sources may be better in supporting drivers' and pedestrians' peripheral vision. This means that light sources that emit white light, as opposed to yellow or orange light, may be more beneficial than the lumen rating for the lamp would suggest.

Metal halide lamps and fluorescent lamps (and in the future, some LEDs) emit more energy in the short-wavelength portion of the spectrum (i.e. blue). Given equal lamp wattages, nighttime visibility in the periphery is likely to be better from metal halide lamps than high pressure sodium (HPS) lamps.

Pulse-start metal halide lamps are much more efficient than older "probe-start" metal halide lamps, maintain lumens better over time, and reduce color variations from lamp to lamp. All metal halide lamps should be specified with the pulse-start technology, although this most often requires that higher wattage lamps must be operated vertically with the base upward, not horizontally. This limits the range of fixtures that can be

considered. All pulse-start lamps require a ballast that has an ignitor. This is provided automatically if a pulse-start lamp or ballast is specified. (NOTE: The State of New York will be joining other states in banning older technology probe-start metal halide lamps for new light fixtures, so it is critical that pulse-start technology become the norm for campus metal halide fixtures.)

"Ceramic" Metal Halide is a form of pulse-start metal halide that uses an arc tube made of ceramic material rather than quartz glass. It is a highly efficient light source with longer lamp life, a universal burning position, better maintained lumen output, and far better color characteristics than older "quartz arc tube" metal halide. It is available in wattage of 20W up to 150W in 3000K color, looking very similar to halogen in color quality. This is the light source that provides superior all-around performance for outdoor lighting. (It is only beginning to be available in wattages of 175W or higher.)

Compact fluorescent lamps can also provide excellent color, lumen maintenance, and efficiency, but the lamps do not last as long, and the optical performance is less precise. Compact fluorescent does have the benefit of restriking instantly, rather than waiting a couple of minutes to cool before starting up again. This may be a lamp we want to consider in pathway lighting where optical performance is less critical.

The following table is a comparison of lamp characteristics. These are approximate because characteristics vary according to lamp wattage, bulb shape, base type, etc. Efficacies are reported in terms of photopic (i.e. daytime) Lumens-per-Watt (LPW), so they do not reflect the improved nighttime visibility that may be gained from blue-rich lamps. As a result, high pressure sodium lamps appear deceptively efficient compared to the others.

	AverageLife (in hours)	**Efficacy (LPW)**	**CCT**	**CRI**
High Pressure Sodium (HPS)	24,000	64-110	2100K	22
20-150W Ceramic Metal Halide (CMH)	9 – 20,000	50-87	3000K – 4000K	81-92
175-400W "Pulse-start" Metal Halide (MH)[3]	15 - 20,000	78-95	4000K	62-70
Compact Fluorescent (CFL)	10 – 15,000	50-80	3000K-4000K	82-85
Linear Fluorescent (FL)	14 - 24,000	70-95	3000K-4000K	85
White LEDs	50,000	20 - 50	3-6000K	60-90

[3] These lamps will soon be banned in New York State because of their poor efficiency.

2.3.5.3 A NOTE ABOUT LEDS

Light Emitting Diodes (LEDs) hold great promise for delivering light efficiently in the near future. However, at this point in time, LEDs do not exceed metal halide or fluorescent in efficacy (they deliver only 20-50 LPW in application); plus, the technology is sufficiently immature that "lamps", light fixtures, power supplies, wiring harnesses, etc. are not standardized or robust. Furthermore, the cost of LED equipment is very high at this point in time. This would make LED lighting systems for the University at Albany's area/roadway/parking lot lighting unreliable and difficult or impossible to maintain over the long term. For these reasons, we have investigated LEDs for use on this project, but are recommending them for only limited areas because they are not yet practical. (Perhaps in three years this will change.) LEDs, particularly colored LEDs, may be suitable for signage, handrails, steplights, and other way-finding applications at the University at Albany. Certainly red or green LEDs are ideal for exit signage.

See the section on the Podium Plaza lighting to see white LEDs recommended under planter seating.

2.3.5.4 MASTERPLAN OUTDOOR LAMP RECOMMENDATIONS

For new or replacement **outdoor applications** we recommend:

- Pulse-start, vertical base-up orientation, metal halide lamps, (usually 250 W) 4000K CCT, for roadway and parking lot areas.
- Pulse-start, universal orientation, ceramic metal halide lamps, (usually 70 W) 3000K CCT, for pole-mounted pedestrian pathway areas and in exterior saucer lights. Where wall-mounted area lighters are required, the same lamp is recommended.
- Pulse-start, universal orientation, ceramic metal halide lamps, (usually 150 W) 3000K CCT, for canopy-mounted lighting on the podium.
- Pulse-start, universal orientation, ceramic metal halide PAR30 (39W) 3000K CCT, for box lights.
- 26 W or 32 W, compact fluorescent lamps, 3000K CCT, with four pins and electronic ballast for step lights, bollards, exterior recessed downlights, etc.
- Warm white LEDs, 3000K CCT, for recessed step lighting, under bench lighting, and other areas where small amounts of light are required or where the light is close to the surface being lighted. Usually the LEDs should be driven at 350 mA current, 24 V, using an electronic power supply.

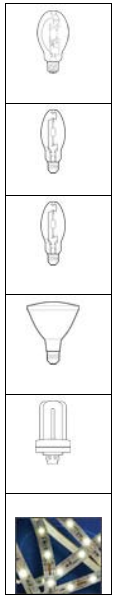

RECYCLING: ALL LAMPS, EXCEPT FOR INCANDESCENT AND LED, SHOULD BE RECYCLED THROUGH AN ELECTRICAL DISTRIBUTOR BECAUSE THEY CONTAIN MERCURY. THERE MAY BE A SMALL CHARGE FOR THE RECYCLING SERVICE.

2.3.5.5 OUTDOOR LIGHTING BALLAST RECOMMENDATIONS

For metal halide lamps between 175 W and 400 W, specify magnetic ballasts with ignitor that are pulse-start (PS), high power factor (HPF), rated for –20F starting.
For metal halide lamps between 39 W and 150 W, specify electronic ballasts that are pulse-start (PS), high power factor (HPF), square-wave, less than 20% Total Harmonic Distortion (THD), rated for –10F starting.

2.3.6 Criteria for Outdoor Lighting Fixture Products and Poles

2.3.6.1 Lighting Fixture ("Luminaire") Optical Technology

The goals in selecting lighting equipment for the University at Albany include:

- Luminaires that emit little to no upward light (these usually have flat lenses)
- Luminaires with a variety of precise optical systems that efficiently deliver light where needed, and minimize stray light and light trespass
- Luminaires with sealed optical systems that stay clean longer, allowing the designer to use fewer luminaires or lower wattage lamps because less degradation due to dirt and insects is expected (See IP Ratings)
- Luminaires that are easy to maintain and use lamps and components that last a long time and use "plug-n-play" parts to enable easy replacement when needed
- If possible, walkway luminaires should be provided with small-prism glass lenses that smooth the edge of the light pattern on the ground, dramatically improving the visual comfort for pedestrians
- Luminaires that share the style of buildings and "furniture" on the site
- Materials that meet green principles.

2.3.6.2 IP Ratings

"IP" stands for "Ingress Protection" and is a two-digit rating system for a fixture's water and dust infiltration resistance: the higher the digit, the higher the resistance. The first number defines the level of protection against solid particles (0 is low, 6 is the highest), and the second number defines the protection against moisture (0 is low, 8 is the highest). For outdoor fixtures an IP rating of 65 is recommended to prevent ingress of dust, and protection from water spray. Fixtures with this rating will stay cleaner and moisture-free for many years, dramatically increasing service life and light output.

2.3.6.3 Poles

The goals in selecting poles and pole locations for the University at Albany include:

- Locations that are several feet away from the roadway and driving surfaces so that they are less likely to be struck and damaged
- Pole designs that break away from the bases to reduce injury if they are hit
- Using poles that are relatively high (25' along roadways and in large parking lots, 16' along roadways around the podium that are heavily used for pedestrian traffic, and 14' along pedestrian pathways) so that luminaires can be more widely spaced, reducing the high material and labor cost of poles and bases
- Using poles in parking lots that have multiple heads whenever possible, allowing light levels to be evenly reduced late at night, and reducing pole costs
- Poles that share the style of buildings and "furniture" on the site
- Materials that meet green principles.

Comparison of different pole options

Poles for decorative post top luminaires vary in height, usually between 8' and 30'. They need to be mounted securely to the ground plane so that they remain vertical. Some poles are "direct burial" (or "imbedded"), meaning some amount of the pole (usually 4-6') is

buried below grade, and the soil is back-filled and mechanically "tamped" to compact the soil and gravel around it. Sometimes a dry mix of concrete is added around the buried pole to ensure it will not tilt over time. (It is fairly easy for utility crews to straighten the pole if it does tilt over time.) There must be at least one slot in the buried end of the pole to accept cable to feed the luminaire.

Poles may also be mounted to an anchor base, either a cast-in-place concrete cylinder, or a hollow metal base that is screwed into the soil. In either case, slots in the base of the pole slide over anchor bolts that protrude from the base, and nuts are screwed down over the bolts to hold the pole in place. There must be a leveling adjustment in the base of the pole to account for slight variations from horizontal in the anchor base. Access to the anchor bolts can be difficult for installers wearing large gloves if they have to access the bolts through a small and awkwardly-placed hole in the base of the pole.

There are many materials for poles: cast iron, steel, aluminum, fiberglass, concrete. Each has its advantages and disadvantages.

Fiberglass Pole

Advantages

- Direct burial pole is easy to install, and requires no waiting for concrete to cure. Some fiberglass poles are available for mounting to an anchor base.
- Electrically non-conductive
- Corrosion resistant
- Fiberglass material should be "solid-core" (or "color-impregnated") so that scratches and gashes in the pole will be less noticeable
- Lower cost option than many metal poles
- Lighter, less expensive to ship to sites
- Should have above-ground access door, otherwise it's a maintenance problem

Disadvantages

- Needs to be painted every 15 years because the color fades with time (some manufacturers require a coating or paint be applied more frequently than this, some as frequently as 7 years)
- Appears to be "cheaper" and less durable than metal poles
- Pole has texture that looks un-metallic if standard paint finish is applied. "Smooth" paint finishes help to get rid of turn marks.
- "Weed-whackers" beat up the base of fiberglass poles
- If not stored carefully, heat can warp the pole

Aluminum Pole

Advantages

- Good quality appearance. Fluting and other relief details are easy options
- Factory-installed paint finish often more durable than fiberglass pole finish. The pre-treatment and base coating of the pole is critical to the paint and pole durability.

- With good-quality multi-stage paint finish in factory, corrosion is minimal, especially when low-copper aluminum alloy is used
- Moderate cost: Tapered aluminum poles are less expensive than straight aluminum poles in sizes greater than 14'
- Aluminum has scrap value at the end of its life

Disadvantages

- Electrically conductive
- More difficult to install than fiberglass because it requires anchor base

Steel Pole

Advantages

- Moderate initial cost, now similar to aluminum
- Steel has scrap value at the end of life

Disadvantages

- Electrically conductive
- Corrodes easily. Needs frequent painting.
- More difficult to install because it requires anchor base
- Heavier to ship to jobsite than either aluminum or fiberglass poles.

Concrete Pole

Advantages

- Durable, non-corroding
- Electrically non-conductive
- Easy, direct burial installation (or to anchor bolt base), that requires no waiting for concrete to cure
- Several color options for appearance
- Can function as a barrier against vehicular traffic for pedestrians, but will not break away if struck by vehicle

Disadvantages

- Non-traditional appearance (doesn't look like metal)
- Must be re-coated with preserving finish every 15 years
- Hard to add accessories such as banners or parking signs. Requires stainless steel bands around the pole unless pole is pre-drilled for these attachments)
- Limited number of appearance options beyond color and aggregate
- Slightly higher initial cost than fiberglass or aluminum poles

Cast Iron Pole

Advantages

- Very durable
- Traditional appearance, available with many traditional decorative options

Disadvantages

- Very expensive
- Very expensive to ship to site because the pole is so heavy
- Electrically conductive

2.3.6.4 TRANSFORMER BASE FOR POLES

Anchor bolts, when needed, should be galvanized, and that galvanizing should extend to the whole bolt, not just the top few inches. Alternatively, bolts can be stainless steel so that they are less susceptible to corrosion.

Anchor bolt mounts should be securely mounted or molded in the base so that the pole base cannot be rocked off the base, tearing through the mounting plate. Welding of aluminum makes the aluminum weaker. When tabs or slots for aluminum anchor bases are welded to the larger "bell" of the base, the weld must be "tempered" afterward to return the welded molecules to their original strength. Slots for anchor bolts are preferable to holes, because they make the pole much easier to align and install.
The hand hole in the base must be large enough for easy access to the anchor bolts, otherwise it is difficult to ratchet down the bolts and level the pole. However, it's not just the size of the hole, it's the size and curve of the arc the hand takes to reach the bolts with a ratchet tool. The larger the clear opening down to the bolts, and the gentler the arc, the better.

2.3.6.5 CONTROLS AND PHOTOSENSORS FOR POLE-MOUNTED LIGHTING

Exterior lighting should be automatically controlled with a campus-wide Building Automation System (BAS). When this is not possible and an individual fixture must be controlled by a photosensor mounted to the fixture, avoid button-type photosensors because they have a high failure rate. The larger "twist-lock" photosensors are preferable. Photosensors must be able to be oriented toward north in the field.
The photosensor must have the same finish as the luminaire, or it will look odd.
Twist-lock photocells can be mounted to bracket arms on poles rather than the luminaire.

2.3.7 Outdoor Lighting Fixture Style and Scale

2.3.7.1 Uptown Campus

The University at Albany's image is progressive, educating future leaders. The style of outdoor lighting should be either innocuous, so that it blends in with existing architecture, or more futuristic in appearance. In order to match the majority of existing fixtures on the campus, the finish for poles and heads is a bronze finish.

For parking lots, the fixture is a simple box, delivering the light without calling attention to itself

Figure 12 - Uptown Campus Roadway and Parking Lot Fixture

Pedestrian pathway luminaires are closer to human scale, so the style is more critical. The Cooper "Mesa" was selected for its appearance, functional, and cost reasons.

Figure 13 - Uptown Pedestrian Walkway Fixture

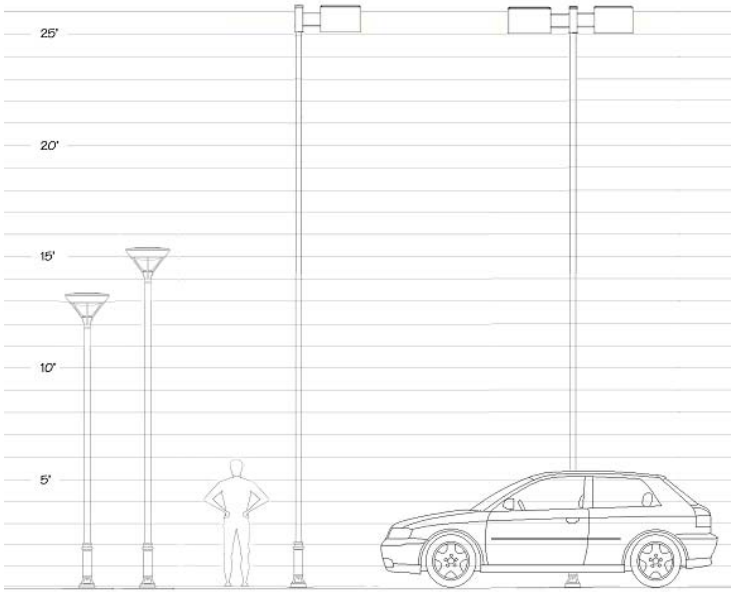

Figure 14 - Style and Scale of Uptown Exterior Lighting

The image above illustrates the proposed luminaire mounting heights, 14' above finished grade for the pedestrian pathways, 16' above grade for the mixed pedestrian and roadway areas immediately outside the podium, and 25' above finished grade for the roadways and parking lots.

2.3.7.2 Downtown Campus

The image below illustrates the proposed luminaire and its mounting height for the Downtown Campus. It looks like an early 20th Century "acorn" top fixture mounted on a fluted pole. However, the optical system limits the amount of uplight to less than 1%, so it is very dark sky friendly. The heavy glass globe, which is very durable compared to acrylic or polycarbonate globes, effectively delivers light to angles that illuminate faces and buildings, making the campus feel brighter and safer. The pole height is 12' in order to maintain a pedestrian scale, but the fixture is high enough to reduce the ease of vandalism, and high enough that poles can be spaced 50 to 60' apart. Unlike the uptown campus, the pole is aluminum so that it can fluted, as many poles of the early 20th Century were. Aluminum has the advantage of being easily recycled at end of useful life.

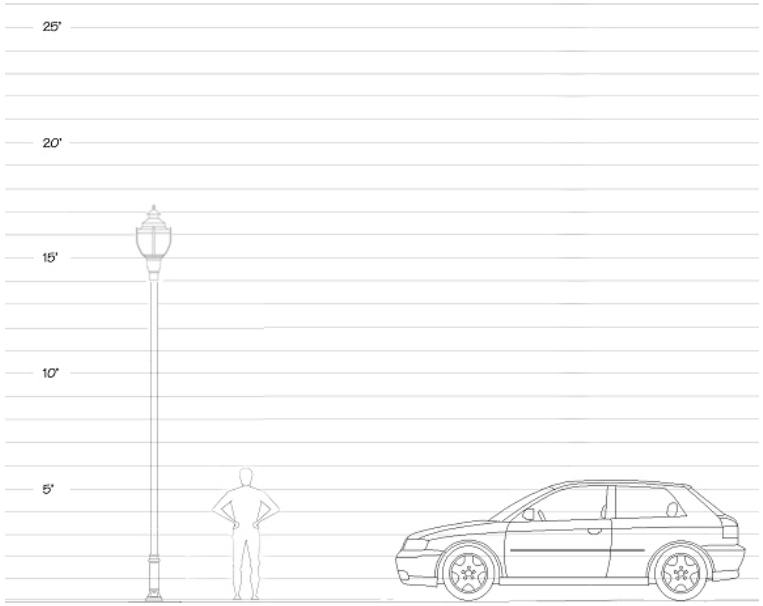

Figure 15 - Style and Scale of Downtown Campus and Alumni Quad Walkway Lighting

2.3.8 LIGHTING PERFORMANCE – INTERIOR SPACES

When lighting is changed or added to the interiors on the campus, we want it to perform well, providing the lighting levels and quality of light that helps students, faculty, staff, and visitors to perform the visual work that helps them gather information about their environment or perform a visual task. This translates to seeing text in a book, images on a computer screen, instrument panels in a laboratory, signage in a corridor or cafeteria, faces and gestures of people, dirt on a floor, etc. Because there are so many different types of visual tasks and spaces, the criteria for good quality lighting will vary. Target illuminances (footcandles), uniformity ratios, energy limits, and other criteria are derived from Illuminating Engineering Society of North America (IESNA) standards, the National Fire Protection Association (NFPA), and the New York Energy Conservation Code (NYECC).

Good lighting practice for indoor spaces include

- Providing enough general (or ambient) light in room for way-finding, seeing faces, appreciating the surroundings, and to avoid potential hazards
- Provide lighting at task locations for reading or examining graphic materials
- Ensuring the light fixtures are not so bright or glaring that it interferes with visual comfort or the ability to see details on a computer screen
- Eliminating flicker that can be distracting or a trigger for migraine headaches
- Providing light sources with sufficient color rendering ability to bring out skin tones and colors in a satisfactory way
- Enhancing the architecture, making artwork and bulletin boards visible, making food look appetizing, making spaces appear safe and welcoming, etc.

It is important that new or replacement fixtures are durable, easy to maintain, and energy-efficient, because an installation that lasts a long time and is inexpensive to operate is also more economical in the long run.

2.3.8.1 LIGHTING QUALITY ISSUES

2.3.8.1.1 Task Visibility

The "visual task" is the work that our eyes must do to gather information. This can be reading of book text, taking notes, following the face and body gestures of the professor, reading a chalkboard, reading labels on chemicals, evaluating quantities in a chemistry lab, reading computer displays, etc. etc. Task visibility depends on the three-dimensional relationship between the viewer, the object, and the light source. It also depends on the nature of the task itself, the amount and color of light delivered by the light fixture, and the light adaptation level of the viewer. Although all of these issues are important, too often we simply evaluate lighting quality with the light levels, because that is easy to measure and calculate. In general, tasks are easier to see if there is more light on them, but this is not always the case. The computer screen, for example, is much more visible with LESS light on the screen. As designers, we are often juggling the cost of electric power, the different types of visual tasks, light levels, the critical nature of the visual work, and many other lighting quality issues to develop a lighting design.

2.3.8.1.2 Target light levels, both horizontal and vertical illuminance

Here is a list of interior space types and the target light levels (or "illuminance", measured in footcandles) developed by consensus by the Illuminating Engineering Society of North America. Note that not all light levels are for horizontal surfaces. If faces or chalkboards are important in a classroom, for example, a vertical illuminance recommendation is listed also.

[redacted]

Figure 16 - Target Illuminances for Campus Interior Spaces (derived from IESNA Handbook 2000)

2.3.8.1.3 Glare

Glare is uncomfortable and can be distracting, or can obscure the ability for a viewer to see details in a scene. All light fixtures recommended in this Masterplan have been evaluated for their potential to produce glare. In general, the light fixture was selected because it directs light upward onto the ceiling, or towards a wall surface, or downward onto desks, but NOT into the eyes of the user.

2.3.8.1.4 Flicker

About 10% of the population is directly bothered by 60Hz flicker, finding it distracting or annoying. A larger percentage of the population may not perceive flicker, but may

experience additional headaches because of it. Today, all new fluorescent products are available with high-frequency electronic ballasts that superior in terms of energy efficiency as well as eliminating perceived flicker. All existing fluorescent fixtures on the campus with old magnetic ballasts should be upgraded to electronic ballasts. Metal halide lamps, if operated with magnetic ballasts, will exhibit flicker. These should not be used indoors. Electronic ballasts are available that will eliminate perceived flicker.

2.3.8.1.5 Uniformity of Light

Light levels on visual task areas should be relatively uniform, because it is difficult for the human eye to see details in the darker areas. In general, it's wise to keep light levels in a workspace within a 3 to 1 range.

2.3.8.1.6 Luminances of Room Surfaces

Offices and classrooms and corridors can appear gloomy and uninviting walls and ceilings are dark. Lighting designs should strive to provide some lighting on walls and ceilings to counteract the "cave effect."

2.3.8.1.7 Facial Modeling

In rooms where it is important to see faces, such as offices or classrooms or conference spaces, diffuse light helps makes faces easier to see. Bouncing light off of light-painted walls and ceilings is very helpful.

2.3.8.1.8 Energy Performance

For reasons of sustainability and cost, keeping lighting energy use to a reasonable minimum is important. It is more difficult to reduce energy in existing buildings on the University at Albany campuses because we are limited to the existing ceiling types, room configurations, existing wiring and other conditions, as well as the importance of preserving the historical character of the campuses. However, the Lighting Masterplan is recommends high efficiency lighting fixtures as well as lamps and ballasts in order to keep energy use and costs low. The Allowed Watts per Square Foot for different space types are listed in Figure 16 above. These are from the current NY State Energy Conservation Code. In almost all cases, the Lighting Masterplan designs are at or below these allowed power maximums.

2.3.8.1.9 Lighting Controls

One of the best ways to save energy is to shut off lights when they are not needed.

- Small offices (less than 900 sf) can be retrofitted with PIR (passive infrared) wall-switch occupancy sensors, such as the Watt-Stopper WS-200.
- Small offices, classrooms, conference rooms, etc. where there may be filing cabinets, shelving, or other obstructions with line-of-sight detection can be retrofitted with Dual Technology wall-switch occupancy sensors, such as the Watt-Stopper DW-100.
- Occupancy sensors in classrooms should be the "Dual Technology" type, to ensure small motions can be picked up by the sensor, but should be designed with a manual override so that the instructor can shut off at least half of the lighting for data projector presentations. See the wiring diagram on the Watt-Stopper DT-200 specification sheet, or the Watt-Stopper Occupancy Sensor Design and Application Guide for more information.
- Corridors should have 1/3 of the lighting on a NightLight circuit, so that it is lighted 24 hours a day and also functions as emergency lighting. These lights need to be evenly spaced in the corridor. The light fixtures in between can be put on Passive Infrared (PIR) occupancy sensors, so that they shut off when no one is in the corridors. Watt-Stopper CI-200 is a ceiling sensor which can be wired in conjunction with other sensors to control a whole corridor of lighting.

NOTE: Although Watt-Stopper is mentioned here, Hubbell Controls makes similar products. However, the performance specifications for a Watt-Stopper product will not necessarily apply to a Hubbell product, so the layout of occupancy sensors needs to be customized to the space and product.

NOTE ALSO: Light fixtures controlled by occupancy sensors should be equipped with Programmed Start ballasts, which treat the fluorescent lamp in such a way that frequent switching will not degrade the lamp life.

2.3.8.2 INDOOR LAMP TECHNOLOGY – CRITERIA FOR LAMP SELECTION

2.3.8.2.1 Color of light

There are two metrics commonly used to identify light source color: Correlated Color Temperature (CCT) and Color Rendering Index (CRI). CCT refers to the color of light emitted by the lamp, addressing only whether the light is orange-white (2000-2800K), warm-white (2800K to 3300K), neutral-white (3300K-3800K), cool-white (3800K-4500K), or blue-white (4500K-7000K). This metric doesn't address how well the light renders colors, however. CRI is a rough metric that rates color rendering on a scale of approximately 0 to 100. CRIs of 80 or greater are usually considered very good, CRIs of 50 or lower are considered poor. Ideally for interior spaces, we would like to use lamps that render colors well so that faces, textbook photos, colored printed materials, interior finishes and fabrics, food, artwork, and signage deliver meaning and are pleasing to view.

Fluorescent lamps are primarily used in University at Albany interiors, and this will continue to be true until LEDs reach a level of consistency, reliability, and reasonable price. Fluorescent lamps, whether T8 linear tubes or compact fluorescent, should have a minimum CRI of 80 and a neutral color of 3500K. When metal halide lamps are used indoors, they, too, should have a color temperature between 3000K and 3500K, and a minimum CRI of 80. LEDs, when color metrics have been standardized for them, should also meet the same criteria as metal halide to ensure acceptable color. Halogen lamps, used in a small number of special places where dimming is needed, meet these criteria automatically.

2.3.8.2.2 Efficacy and comparison of lamps

"Efficacy" refers to the efficiency of light sources in producing light output (lumens) per unit of power (Watts). Lamp efficacy is communicated in terms of lumens per Watt (LPW). The lumen is the basic unit of visible light, and it is based on the human eye's daytime color sensitivity.

4' long linear fluorescent lamps should be the workhorse lamp for University at Albany interiors. The "Super T8" lamp, the premium 1" diameter, 3100 lumen lamp delivers an impressive 95 LPW with excellent color quality, and lasts 24,000 to 30,000 hours on average. This lamp type should be used as much as possible throughout the campus in order to reduce energy use and maintenance. Old technology "T12" lamps (1.5" diameter) should be converted over to T8 (by changing the ballast in existing fixtures) as quickly as possible because the energy savings is an automatic 25% or more. The linear fluorescent fixtures installed in the barrel-vault ceiling areas of the Podium academic buildings use very-old-technology T12 High-Output lamps, which should be replaced as quickly as possible with newer technologies. (In 20XX it will become very difficult to find replacement ballasts for these lamps, so there is an extra incentive.) The energy payback on the changeout from older technology fluorescent is almost always less than 2 years.

Compact fluorescent lamps are available in dedicated pin-based versions that require a separate electronic ballast, and in a screwbase version with a ballast built into the base. The latter fits into a conventional incandescent socket. Recessed round downlights,

recessed round wallwashers, wall sconces, and decorative pendants are available with dedicated compact fluorescent lamps. Although not as efficient or long-lived as linear fluorescent, compact fluorescent is a tremendous energy and maintenance improvement over incandescent light sources in new fixtures. They are ideal for light fixtures that produce a soft, unfocused pattern of light. Dimmability is an option for new installations.

Screwbase compact fluorescent lamps are almost as efficient and last almost as long as pin-based compact fluorescent, but the color, life, and quality control is inconsistent because they are manufactured in many countries with inconsistent supervision. Screwbase lamps should be used for incandescent retrofit applications only.

When a high-intensity or focused light source is needed, pulse-start metal halide lamps are often the most efficient option. See the description of metal halide options and recommendations in the outdoor lighting section. For lamps under 175W, select 3000K ceramic metal halide lamps with electronic ballasts for best performance. Keep in mind that metal halide lamps cannot restrike instantly if extinguished, so they are not a good choice for emergency lighting.

Light Emitting Diodes (LEDs) hold great promise for delivering light efficiently in the near future, particularly where focused light beams are required. However, at this point in time, LEDs do not exceed metal halide or fluorescent in efficacy (they deliver only 20-50 LPW in application); plus, the technology is sufficiently immature that "lamps", light fixtures, power supplies, wiring harnesses, etc. are not standardized or proven robust. Furthermore, the cost of LED equipment is very high. This Lighting Masterplan is recommending LED products for one interior application only. As the technology matures and the price comes down in coming years, LED products will be practical for more applications.

The following table is a comparison of lamp characteristics. These are approximate because characteristics vary according to lamp wattage, bulb shape, base type, etc. Efficacies are reported in terms of photopic (i.e. daytime) Lumens-per-Watt (LPW)

	AverageLife (in hours)	**Efficacy (LPW)**	**CCT**	**CRI**
High Pressure Sodium (HPS)	24,000	64-110	2100K	22
20-150W Ceramic Metal Halide (CMH)	9 – 20,000	50-87	3000K	81-92
175-400W "Pulse-start" Metal Halide (MH)	15 - 20,000	78-95	4000K	62-70
Compact Fluorescent (CFL)	10 – 15,000	50-80	3000K-4000K	82-85
Screwbase Compact Fluorescent	6 – 10,000	37-63	2700K-5000K	82

Linear Fluorescent (FL)	14 - 24,000	70-99	3000K-6500K	85
White LEDs	50,000	20-50	3-6000K	60-90

Figure 17 - Comparative features of lamps for interior applications

2.3.8.3 INDOOR LAMP RECOMMENDATIONS

For new or replacement interior applications we recommend these common, robust lamps for the majority of fixtures:

- 32W 4' long T8 fluorescent lamps, 85 CRI, 3500K CCT, 3100 initial lumen rating for standard linear fixtures, recessed 4' long fixtures, linear wall-mounted fixtures, etc. These lamps are also called "Super T8s" or "Premium T8s" and are the lamps recommended for rebates by NYSERDA because of their superior quality and energy-efficiency. The rated lamp life is 24,000 hours, and often lasts significantly longer if not switched frequently.

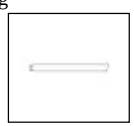

- 32 W triple-tube compact fluorescent lamps, 85 CRI, 3500K CCT. The generic designation for these lamps is CFTR32/835. These lamps have a pin-base, and are operated on an electronic ballast. They last 10,000 hours or more and are frequently used in fixtures that traditionally used incandescent lamps.

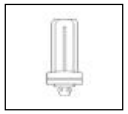

- 26 W triple-tube compact fluorescent lamps, 85 CRI, 3500K CCT. The generic designation for these lamps is CFTR26/835. These lamps have a pin-base, and are operated on an electronic ballast. They last 10,000 hours or more and are frequently used in fixtures that traditionally used incandescent lamps. (The 26 W lamp and the 32 W are interchangeable on the same socket and ballast.)

"Screwbase compact fluorescent" is a compact fluorescent lamp with integral ballast that screws into an existing medium base socket as an energy-efficient retrofit. When replacing incandescent lamps, use the following rules-of-thumb:

- Divide the ideal incandescent bulb wattage by three to four to get the ideal replacement screwbase CFL wattage. For example, if a 60W incandescent bulb is being replaced, choose a 15 W to 20 W replacement. Try to find a bulb that is as close in overall size to the original bulb as possible.
- Make sure the bulb doesn't stick out of the fixture, creating a source of glare.
- Choose compact fluorescent bulb brands that you know: Philips, Sylvania, GE. These generally last longer and have superior color characteristics and consistency compared to most of the lesser-known brands.
- Choose compact fluorescent bulbs that are 2700K to 3000K in color so that they match the color of the incandescent bulb being replaced.
- Look for a life rating of 10,000 hours or more.

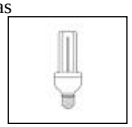

RECYCLING: ALL LAMPS, EXCEPT FOR INCANDESCENT AND LED, SHOULD BE RECYCLED THROUGH AN ELECTRICAL DISTRIBUTOR BECAUSE THEY CONTAIN MERCURY. THERE MAY BE A SMALL CHARGE FOR THE RECYCLING SERVICE.

2.3.8.4 Ballast Recommendations for Interior Fixtures

All ballasts for linear T8 fluorescent lamps and shall be

- High-frequency electronic (>30,000 Hz)
- High Power Factor
- Less than 10% THD (Total Harmonic Distortion)
- Programmed-Start for any fixtures that will be switched by occupancy sensors, daylight sensors, or switched on and off more than 3 times a day (59W or less for two 32W T8 fluorescent lamps)
- High-efficiency Instant-Start for fixtures that remain on most of the day (55W or less for two 32W T8 fluorescent lamps)
- Ballast factors of 0.88 for normal output, 0.77 for low output, 1.18 for high output
- Warranted for a minimum 3-years for ballast and labor

All ballasts for pin-based compact fluorescent lamps shall be

- High-frequency electronic (>30,000 Hz)
- High Power Factor
- Less than 10% THD (Total Harmonic Distortion)
- Programmed-Start for any fixtures that will be switched by occupancy sensors, daylight sensors, or switched on and off more than 3 times a day (59W or less for two 32W T8 fluorescent lamps)
- Ballast factors of 0.90 or higher, one 32W compact fluorescent lamp drawing no more than 35W
- Warranted for a minimum 3-years for ballast and labor

All ballasts for metal halide lamps shall be

- Square-wave low-frequency or high-frequency electronic
- High Power Factor
- Ballast factor of 95% or more
- Less than 10% THD
- Warranted for a minimum 3-years for ballast and labor

All power supplies (drivers) for LED products shall be

- Tested with the LED product to deliver light with no perceivable flicker (>200 Hz)
- High Power Factor
- Less than 10% THD
- Warranted for a minimum 3-years for power supply and labor

2.3.8.5 Criteria for Indoor Lighting Products

The goals in selecting lighting equipment for the University at Albany include:

- Luminaires that are high in efficiency (the actual values vary according to the type of fixture)
- Luminaires that deliver light where needed for the application, and limit light emitted in glare zones
- Luminaires that are easy to reach and clean
- Luminaires that are easy to maintain and use lamps and components that last a long time and use “plug-n-play” parts to enable easy replacement when needed
- Luminaires that share the style of the buildings, or have a vanilla appearance that will not compete with the historic appearance
- Materials that meet green principles.

2.3.8.6 STYLE

2.3.8.6.1 Uptown Campus

In lobbies, libraries, classrooms, and other spaces with historical lighting elements, these should be preserved, or replaced with products that are similar in appearance to the originals. For example, the "palm lights" and saucer lights will continue to be used and maintained to preserve the original appearance. In classrooms and offices with the original barrel vault ceilings, the original 6" x 6" housing linear fluorescent fixtures will be replaced with pendant fixtures of similar size and appearance, but using contemporary lamps and ballasts.

Entry spaces with recessed incandescent round lensed downlights will be replaced with a retrofit LED downlight that will maintain a similar appearance.

Corridors that have undergone ceiling changes since the original construction will be equipped with recessed 2' x 4' fixtures that have a minimal style component. They deliver a soft pattern of light that will make corridors look bright and inviting without glare.

2.3.8.6.2 Downtown Campus

Similarly, historic spaces such as the Library and Auditorium will maintain a historic appearance with traditional decorative chandeliers, supplemented with fluorescent fixtures that provide needed light levels without calling attention to themselves.

Classrooms with dropped acoustical ceilings have little historical appearance. These will be equipped with contemporary low-glare recessed fixtures. Corridors will be treated the same as Uptown Campus corridors.

2.4 NYSERDA PROGRAMS AND FORMS

After reviewing numerous New York State Energy Research Development Authority programs, two programs (PON1101 and PON 955) stand out as possibilities for the lighting improvements at the University at Albany. PON 1101 either pays for equipment or actual **ENERGY** savings. PON 955 pays for equipment or actual **DEMAND** reduction. Unfortunately, NYSERDA does not create custom programs for large energy users.

Some NYSERDA programs can be used in conjunction with each other, as long as the energy savings incentive and the equipment rebate don't derive from the same equipment. For example, if incentives from PON 1101 reduced the cost of more efficient equipment, University at Albany would not be able to apply for funding under PON 955 for the energy saved by using the more efficient equipment. In short, selected areas and fixtures should be applied to the different incentive options.

In addition to these specific programs that will only provide rewards to the university, NYSERDA has a program that provides incentives consultants such as Flex-Tech and Technical Assistance. The programs are very similar. NYSERDA will support 50% of the consultant's fees up to a maximum of $50,000. The consultant does not have to be based/headquartered in New York State nor does the consultant need to be on a MWBE list. Both PON 955 and 1101 require some energy management work. Flex-Tech or Technical Assistance would help University at Albany offset the costs associated with this energy management.

NYSERDA has caveats with all of their programs. The organization must pay the System Benefit Charge (SBC) in utility fees to be eligible for funding (If National Grid provides University at Albany's power, this should be automatic). A copy of the utility bill needs to be submitted to verify the SBC. There are other specific requirements and limitations per program.

Regardless of which funding opportunities are sought, it is important to remember that in addition to the monetary incentives, the University at Albany will also save money just by consuming less energy.

2.4.1 PON 1101 – ENHANCED COMMERCIAL AND INDUSTRIAL PERFORMANCE PROGRAM

This program provides financial incentives for reduction in energy via rebates for new efficient equipment or documenting a reduction in energy consumption through new lighting techniques or technology.
Two applicable types of incentives: Prescriptive Incentives (Tier I) and Performance-based Incentives (Tier III).
Tier I incentives are easier to comply with and the rebates are equipment specific. Tier I is directed towards smaller projects. The incentives are absurdly rigid as demonstrated in

this quote from their PON, "If the measure does not fit into one of the already defined categories, it is not eligible for funding as a pre-qualified measure."
In the list below, fixtures or spaces that could comply are described. The names of the Tier I equipment are listed in parenthesis after the description.

- Classroom/Office fixtures are eligible for $15 rebate per 4' section if the fixture efficiency is over 80%, does not contain more than (3) T8 lamps, and the lamp and ballast combination produce at least 88 mean lumens per Watt after 40% of rated life. The ceiling where the fixture is being installed needs to be painted white with a surface reflectivity of 80%. Retrofitting of existing fixtures is ineligible (HP HEFLEBG-1).
- Saucers are not eligible for equipment specific funding because they use 2' long fluorescent lamps rather than 4' lamps, and LED, and CFL fixtures are ineligible. If metal halide were used as a source in the saucers, MH lamps under 150W and a maintained efficacy of 40 lumens per watt are eligible for a $25 rebate per fixture (HID-1).
- Parking Lot and Roadway fixtures are not eligible for equipment specific funding. 250W is the maximum wattage with equipment-specific Tier I funding. If the University approves using this lamp in lieu of the 400W campus standard lamp, $60 per fixture would be available (MH-250).
- Box lights should be eligible for a $25 rebate per fixture. 40 MLPW are needed to qualify. The 39W Par30L lamp does not qualify, while a 50W ED-17 lamp does. An argument can and should be made that the criterion for this credit needs to be reviewed. The 39W Par30L lamp would not strictly qualify in terms of lumens per watt, but it could be validly argued that while the lamp itself is less efficient, the optical characteristics of the lamp dramatically improve the performance of the luminaire. (When you take into account the fixture efficiencies using the two different lamp types, the 39W fixture would deliver the same amount of light with fewer watts than the 50W ED-17 fixture.) (HID-1)

The Tier I maximum applicant incentive for non-Con Edison service territory is $10,000 per program cycle.

2.4.1.1 TIER III

NYSERDA offers $0.05 per kWh of energy savings in Tier III. This compliance method takes more documentation and more time to realize.
Existing yearly energy consumption from a lighting installation must be documented to set a baseline. The lighting is improved and operates for a year. The energy savings are then documented. The client is paid a one-time incentive for the energy saved between the previous installation and the current installation. Without sub-metering the lighting, this could be hard to document. Other building improvements, such as replacing a chiller with a more efficient model, could affect the energy savings and it would be hard to document the true savings by the lighting system.
Target areas for this tier include spaces where equipment specific incentives do not exist (i.e. CFL technology) and places were operation and/or power will be greatly reduced. Target fixture types include the Parking Lot fixtures. Assuming that the daily operating hours remain constant (12 hours for this calculation), a reduction from 400W to a 320W would result in a yearly energy savings of 350 kWH per fixture (Ballast loses were not

included in this calculation, but they would be similar for each wattage so the magnitude of savings is correct). With the NYSERDA incentive, the University at Albany would receive $17.50 per fixture.
Tier III provides the following maximum funding:

- ESCO - $5 Million
- Customer - $1 Million
- Maximum Incentive per Energy Efficient Project – 30% of Project Cost

2.4.2 PON 955 – Peak Load Reduction Program

This program provides financial incentives for reduction in demand during the summer (May 1 through October 31) from 12:00 pm to 6:00 pm on weekdays (excluding holidays).

- Assume $225 per kW of demand reduction (there is a range of incentives, but use $225 as a reference point).
- Facility must save a minimum of 20 kW to be eligible.

This option is best for offices and classrooms where the operating hours will not significantly diminish in the redesign, but the installed power will be reduced.

Example of a medium-sized classroom:

- Classroom is 24'-4 x 19'-6" for a total of 474 ft^2 with a row of light fixtures per barrel vault and a total of (4) vaults
- Oldest lighting – (2) 8' long 1-lamp T12 fixtures per bay. At 119W per fixture, that is a total of 952W installed or 2.0 W/ $ft^{2.}$
- New (Corelite) lighting – (5) 4' long 2-lamp T8 fixtures per bay. At 55W per fixture, that is a total of 1160W installed or 2.4 W/ $ft^{2.}$
- Proposed lighting – (4) 4' long 2-lamp T8 (BF=0.77) fixtures per bay. At 48W per fixture, that is a total of 768W installed or 1.6W/ $ft^{2.}$

Estimated Savings:

- Changing from Oldest to Proposed – 952W – 768W = 184W or 0.184kW. At $225 per kW, this change nets a rebate of $41.40 for this room.
- Changing from New to Proposed – 1160W – 768W = 392W or 0.392kW. At $225 per kW, this change nets a rebate of $88.20 for this room.

2.4.3 Estimated Rebates and Savings

2.4.3.1 PON 1101 Tier I:

- Parking Lot Fixtures - Assuming 300 parking lot fixtures are reduced from 400W to 250W receive the maximum **$10,000**.

2.4.3.2 PON 1101 Tier III

Parking Lot Fixtures:

- Assuming 300 parking lot fixtures are reduced from 400W to 320W ($0.05 per kWH), the University could receive **$5,250**.
- Assuming 300 parking lot fixtures are reduced from 400W to 250W ($0.05 per kWH), the University could receive **$9,855**.

Box lights should not be included because the new design does not save any energy compared to the current installation.

Classrooms & Offices:

- Assume roughly 400,000 $ft^{2.}$ of classroom and office spaces with the oldest lighting.
- Oldest lighting: Using 2.0 W/SF, converting to kW, assuming 12 hours per day of operation for 200 days per year, these spaces consume 1.92 GWH (1,920,000 kWh) of energy.
- Converting to the proposed design: Using 1.6 W/SF, converting to kW, assuming 12 hours per day of operation for 200 days per year, these spaces consume 1.536 GWH (1,536,000 kWh) of energy.
- University at Albany would receive **$19,200** for their energy savings ($0.05 / kWh saved x 384,000 kWh saved).

2.4.3.3 PON 955

2.4.3.3.1 Classroom and Office Space:

- Assuming the 400,000 $ft^{2.}$ is upgraded, the University could receive **$36,000** in rebates from the demand reduction ($225 / kW saved).
- Energy savings from using less energy is approximately $54,000 per year (160 kW saved/year X 3375 hrs/year x $0.10/kwh melded electric rate).

2.4.3.3.2 Parking Lot Fixtures:

- From 400W to 320W – 80W (saved) x 300 (# of fixtures) x 10 hours (daily average operation) x 365 days (days of operation per year) x 0.13 per kWh (National Grid rate) / 1000 hr/kWh (converts W to kW) = **$11,388** University at Albany will NOT be paying to National Grid.
- From 400W to 250W – 150W (saved) x 300 (# of fixtures) x 10 hours (daily average operation) x 365 days (days of operation per year) x 0.13 per kWh (National Grid rate) / 1000 hr/kWh (converts W to kW) = **$21,352** University at Albany will NOT be paying to National Grid.

2.4.3.3.3 Classrooms:

- 384,000 kWh saved (see above for calculation) times 0.13 kWh = **$49,920** University at Albany will NOT be paying to National Grid.

2.4.4 NYSERDA Contacts

Bob Verdar – SAIC (large governmental sub-contractor operates and administers PON 1101 for NYSERDA) 452-8800, ext. 220. He is helpful, but is not specifically knowledgeable about lighting.

Matt Brown – NYSERDA 862-1090 ext. 3336, mcb@nyserda.org. He is extremely helpful. He is the NYSERDA person for Executive Order 111 which the Green and Clean State Buildings.

Jaime Ritchey – NYSERDA 862-1090 ext. 3517, jrr@nyserda.org. She is a person at NYSERDA that deals with Flex-Tech.

2.4.5 Note on Future NYSERDA Programs for the University at Albany

Discussions with NYSERDA program managers suggest that the program incentives may increase for the University when the PONs are renewed in Spring of 2008. For direct information about the program changes, contact Todd Baldyga of NYSERDA at 518.862.1090 ext 3354, tab@nyserda.org.

2.5 Maintenance and Operation Costs

The University at Albany can reduce maintenance costs by

- Installing long-life lamps in place of incandescent lamps or standard linear fluorescent lamps
- Installing occupancy sensors, switch-timers, astronomical timeclocks, and campus-wide automatic controls to switch off lights whenever they are not needed. This reduces the burning time on the lamps, thereby extended the time between lamp replacements. Care must be taken in locating and programming these devices so that safety and security are not compromised.
- Installing ballasts that extend lamp life in areas where occupancy sensors switch lights on and off frequently during the day
- Reducing the number of luminaires that are installed in difficult-to-access areas, such as over stairs
- Standardizing lamping as much as possible, so that fewer different types of lamps need to be stocked as replacements
- Using light fixtures that are have "sealed" designs that minimize the amount of dirt that the fixture and lamps accumulate. This is especially important in outdoor fixtures, so that the light output does not decline due to dirt or insect accumulation. Interior fixture designs that allow a flow of air through the fixture can reduce the accumulation of dirt. For example, suspended linear fluorescent fixtures can direct light upward only, or they can have a baffle on the bottom side that allows air to flow vertically through the fixture. The latter will accumulate less dirt than an all-indirect fixture.

2.5.1 Purchasing Lamps and Lighting Fixtures

2.5.1.1 Purchasing Lamps

New and replacement lamps can be purchased through the New York State Contract, which at the time of this writing is supplied by General Electric. The prices are very reasonable, but not all GE lamps are easily available through the state contract at any given time, and GE does not manufacture every lamp type you may need. The following local lamp distributors can also be contacted for lamps:

2.5.1.1.1 GE Distributor:

GEXPRO Albany (used to be GE Supply), 4 Stanley Drive, Latham, New York 12110, 518-389-3000, 389-3011 fax.

Grainger – Albany, 35 Corporate Circle, Albany NY 12203, 518-869-1414, 518-869-1418 fax

Graybar – Albany, 229 Church Street, P.O. Box 1837, Albany NY 12201, 518-436-4761, 518-434-6739 fax

2.5.1.1.2 Philips Distributor:

Wolberg Electric, 35 Industrial Park Road, Albany NY. 518-489-8451.

2.5.1.1.3 Sylvania Distributor:

Warren Electric Supply, Inc., 31 Adams St Troy, NY 12180, Telephone: 518-272-0700, Fax: 518-272-1560

Horizon Solutions Corp, 4 Access Rd Albany, NY, 12205-4744, Phone: 518-452-6904, FAX: 518-452-6911.

2.5.1.2 Purchasing Lighting Fixtures

There will be many standard fixture types recommended by this Masterplan that are used consistently throughout the campus, both interior and exterior. Ideally, the University would establish a relationship with a local lighting distributor that would agree to keep 10-12 fixtures of each type on the shelf for use by the University on short notice, and agree to order replacements when that stock is committed. This would allow the University to have a consistent negotiated price for the products, also. All of the lamp distributors listed above are also sources for lighting fixtures.

3 Outdoor Lighting on the Campuses

Outdoor lighting can improve visibility and safety for drivers and pedestrians, help employees feel more secure walking from work to bus stop or car, and can provide an identity for the University at Albany campuses. We strive to provide all these lighting benefits while minimizing energy use, environmental damage to flora and fauna, glare, and light pollution.

3.1 Blue Lights

Color is associated with danger or security. The University at Albany campus has "blue lights" which identify locations where a phone is available for emergencies. The recurring issue with the University's blue light phones is their continuous flashing at night. During the day, orange striping on the pole identifies the locations. Campus Police state that the flashing increases conspicuity of the phone locations; this is certainly true. However, students, visitors, and neighbors complain that the flashing is visually uncomfortable, makes the campus feel as though there is a constant state of emergency, and make it difficult to sleep. Many blue lights have been fitted with shields to reduce complaints. This severely reduces the effectiveness of the blue lights. It is difficult to see the flashing, but it is also difficult to see the light itself.

Figure 18 – Blue Light attached to light pole below red stripes

A search has turned up no standards, regulations, codes, or specific recommendations governing use of the blue light phones on campuses. It appears that campuses and manufacturers design their installations on a case-by-case basis. The blue light phone industry is relatively young and has not yet developed standards. It seems that most campuses' blue lights do not flash continuously, but only when the phone is activated.

The University Police Department indicated that they don't like this because it might make a victim's location easier to identify. However, a similar installation at Rensselaer Polytechnic Institute (RPI), a nearby college, does not flash all night, but only when activated. This flashing light calls attention and makes the location stand out, attracting attention if there is an emergency. This strategy prevents complacency, which results in people ignoring the blue lights. This is similar to car alarms that when first introduced, everyone took notice of. Now, they are so common that they are usually ignored.
Although we could not find specific codes and standards of blue lights, we did find research that focuses on flashing vs. steady lights and the effect of the color of light on detection. In the studies, participants more quickly determined vehicles were slowing down when steady lights rather than flashing lights were illuminated on the vehicle[4]. Other research documented the hardship of catching a thrown object under a flashing light. Flashing light makes it hard for people to judge the speed and distance of objects. Other research focused on the color of a light source and how it relates to detection[5]. Blue lights are more easily seen in the periphery than other sources. We recognize the desire for conspicuity, but the flashing lights could actually have diminished returns. Although a student might recognize the pole because it is flashing, he or she might have a harder time determining how far away the pole is.
This research suggests that eliminating the flash would reduce discomfort, while preserving conspicuity[6]. This will improve the visual environment and safety on campus. Another alternative is a suggestion that came up during our nighttime campus tour was a compromise: have the lights flash more slowly, pulsing in light output, rather than delivering a sudden flash. This retains the attention-getting features without as much distraction or urgency.

[4] Bullough, John D., "Rear Lighting Configurations for Winter Maintenance Vehicles", Paper #14 of Proceedings of the Illuminating Engineering Society of North America Annual Conference, August 2001.
[5] Bullough, John D., "Research Matters", Lighting Design + Application magazine, June 2004.
[6] Bullough, John D., "Research Recap", Lighting Design + Application magazine, April 2003.

3.2 UPTOWN CAMPUS EXTERIOR LIGHTING

The lighting systems presented in this Masterplan will provide nighttime illumination that supports safety, security, and visibility for the people using the University at Albany campuses. At the same time it is sensitive to dark skies, energy use, light trespass and glare, and other sustainability issues. The aesthetic image should support the historic character of the campuses. A sample layout of lighting is shown in the attached site lighting plan, based on lighting template layouts.

3.2.1 SITE AND PEDESTRIAN LIGHTING

3.2.1.1 EXISTING CONDITIONS:

Perimeter roadways now use 400W old-technology probe start metal halide lamps in Widelite sag-lens EALM fixtures on 25' poles. Maintained lumens are 23500, with a 15,000 hour life. The roadway light levels exceed IESNA recommendations and the sag lens allows light to be emitted at high angles, making the fixtures glaring for drivers, pedestrians, and neighbors. The fixture generates some upward light which contributes to light pollution. (Some of the fixtures also collect water in the lens, leading to ugly residue.)

Figure 19 - Existing Post Light at Perimeter Road

Parking Lots, similarly, use 400W old-technology probe-start metal halide lamps in Widelite sag-lens EALM fixtures on 25' poles. The roadway light levels exceed IESNA recommendations and the sag lens allows light to be emitted at high angles, making them glaring for drivers, pedestrians, and neighbors. The fixture generates some upward light which contributes to light pollution.

Figure 20 - Existing Lighting for Parking Lots

Roadway/pedestrian areas near podium use 150W High Pressure Sodium lamps in Full Cutoff "shoebox" style fixtures, mounted on 12' poles. Glare control and uplight control is very good, but the light is orange in color and poor in color rendering, and is unevenly spread because the fixture height is too low. Lamp life is rated at 20,000 hours.

Figure 21 - High Pressure Sodium fixtures in "Shoebox" fixtures used near Podium

Figure 22 - Roadway Pedestrian Lighting

Pathways between Academic Areas and Dormitories also use the same shoebox-style HPS fixtures on 12' poles, where there is any lighting at all. Many areas are inadequately lit. The color of the light is orange, which does not flatter the landscaping or the people using the paths.

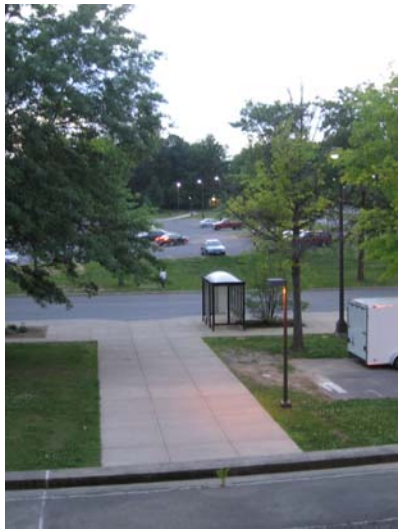

Figure 23 - Existing High Pressure Sodium "Shoebox" Pedestrian Lighting

3.2.1.2 Recommendations for Site and Pedestrian Lighting -Uptown

3.2.1.2.1 Perimeter Roadways

Replacement fixtures or fixtures on new poles should use 250 W Pulse-start metal halide lamps, which will deliver the needed light levels, last longer, maintain better light output, and deliver more consistent color than the outdated 400 W system. The fixture is type P3 and uses a vertically-oriented lamp for best light output. In order to match existing poles, it is mounted on a 23' fiberglass pole and a 17" tall transformer base. The ballast is electromagnetic, but when electronic ballasts become available for 250W lamps, the fixture should be ordered and supplied with the more energy-efficient electronic ballast.

> ***Fixture Type P3*** *- Shoebox style fixture on pole approx. 25' tall*
> Description: Single fixture on arm mounted to 23' pole on 17" tall transformer base, IES Type III distribution, flat lens and optics for Full Cutoff:
> Fixture Ordering Code: Gardco HPV23-1-3XVF-250PSMH-Voltage-BRP with GE MVR250/VBU/PA lamp. (GE, because that is the state contract supplier.)

3.2.1.2.2 Parking Lots

Replacement fixtures or fixtures on new poles should use 250 W Pulse-start metal halide lamps, which will deliver the needed light levels, last longer, maintain better light output, and deliver more consistent color than the outdated 400 W system. The fixture is type P4 and uses a vertically-oriented lamp for best light output. In order to match existing poles, it is mounted on a 23' fiberglass pole and a 17" tall transformer base. The ballast is electromagnetic, but when electronic ballasts become available for 250W lamps, the fixture should be ordered and supplied with the more energy-efficient electronic ballast. The specified pulse-start, clear, ceramic metal halide lamp is a cool white in color appearance, but when this lamp is available is a 3000K (warm color) version, that should be used instead in order to give the campus a unified color appearance similar to the incandescent ambiance envisioned by the Architect.

> ***Fixture Type P4*** *- Shoebox style fixture on pole approximately 25' tall*
> Single fixture on arm mounted to 23' pole on 17" tall transformer base, IES Type V distribution, flat lens and optics for Full Cutoff:
> Gardco HPV23-1-5XVF-250PSMH-Voltage-BRP with GE MVR250/VBU/PA lamp. (GE, because that is the state contract supplier.)

3.2.1.2.3 Roadway/pedestrian areas near podium

Replace the existing fixtures and poles with new, taller poles and fixtures, with 150W Pulse-start metal halide lamps. These poles will be located further from the line of traffic in order to reduce the number of poles damaged by cars and snowplows, as shown on the plans. The 150W ceramic metal halide lamps will deliver the needed light levels, last longer, maintain better light output, and deliver more consistent color than the existing HPS fixtures on shorter poles. The fixture is type P2. It is mounted atop a 14' pole and 17" transformer base. The 70W ceramic metal halide lamps are warm (incandescent-like) in color, in order to help create a warmer-appearing environment, and in order to match the metal halide lighting used as a campus standard. The specified ballast is

electromagnetic, but when electronic ballasts become more widely available for 150W lamps, the fixture should be ordered and supplied with the more energy-efficient electronic ballast. The specified pulse-start, clear, ceramic metal halide lamp is a cool white in color appearance, but when this lamp is available is a 3000K (warm color) version, that should be used instead in order to give the campus a unified color appearance similar to the incandescent ambiance envisioned by the Architect.

Fixture Type P2 *- Decorative Fixture approx. 16' pole*
Single post-top fixture mounted on 14' pole on 17" tall transformer base, IES Type III distribution, flat lens and optics for Full Cutoff:
Cooper Lighting (Invue "Mesa") MSA-150W-MP-Voltage-3S-FG-BZ
with GE CMH150/U/830/MED/O lamp.
The fixture has a slipfitter that fits over a 3" O.D. tenon

3.2.1.2.4 Pathways between Academic Areas and Dormitories

Replace the existing fixtures and poles, or install new fixtures and poles in these areas with 70W Pulse-start metal halide lamps. These poles will be located along walking paths as shown on the plans. If the poles are located within 25' of dormitory buildings such that the back light from the fixture could enter a 1st floor dormitory room, specify the fixture with a "House-side shield." The 70W ceramic metal halide lamps are warm (3000K, incandescent-like) in color, in order to help create a warmer-appearing environment, and in order to match the metal halide lighting used as a campus standard. The fixture is type P1, or P1 with House-side shield. It is mounted atop a 12' pole and 17" transformer base. The specified ballast is electromagnetic, but when electronic ballasts become more widely available for 70W lamps, the fixture should be ordered and supplied with the more energy-efficient electronic ballast.

Fixture Type P1 *- Decorative Fixture - Pedestrian walkways, approx. 14' tall*
Single post-top fixture mounted on 12' pole on 17" tall transformer base, IES Type III distribution, flat lens and optics for Full Cutoff:
Cooper Lighting (Invue "Mesa") MSA-70W-MP-Voltage-3S-FG-BZ
with GE CMH70/U/830/MED/O lamp.
The fixture has a slipfitter that fits over a 3" O.D. tenon.

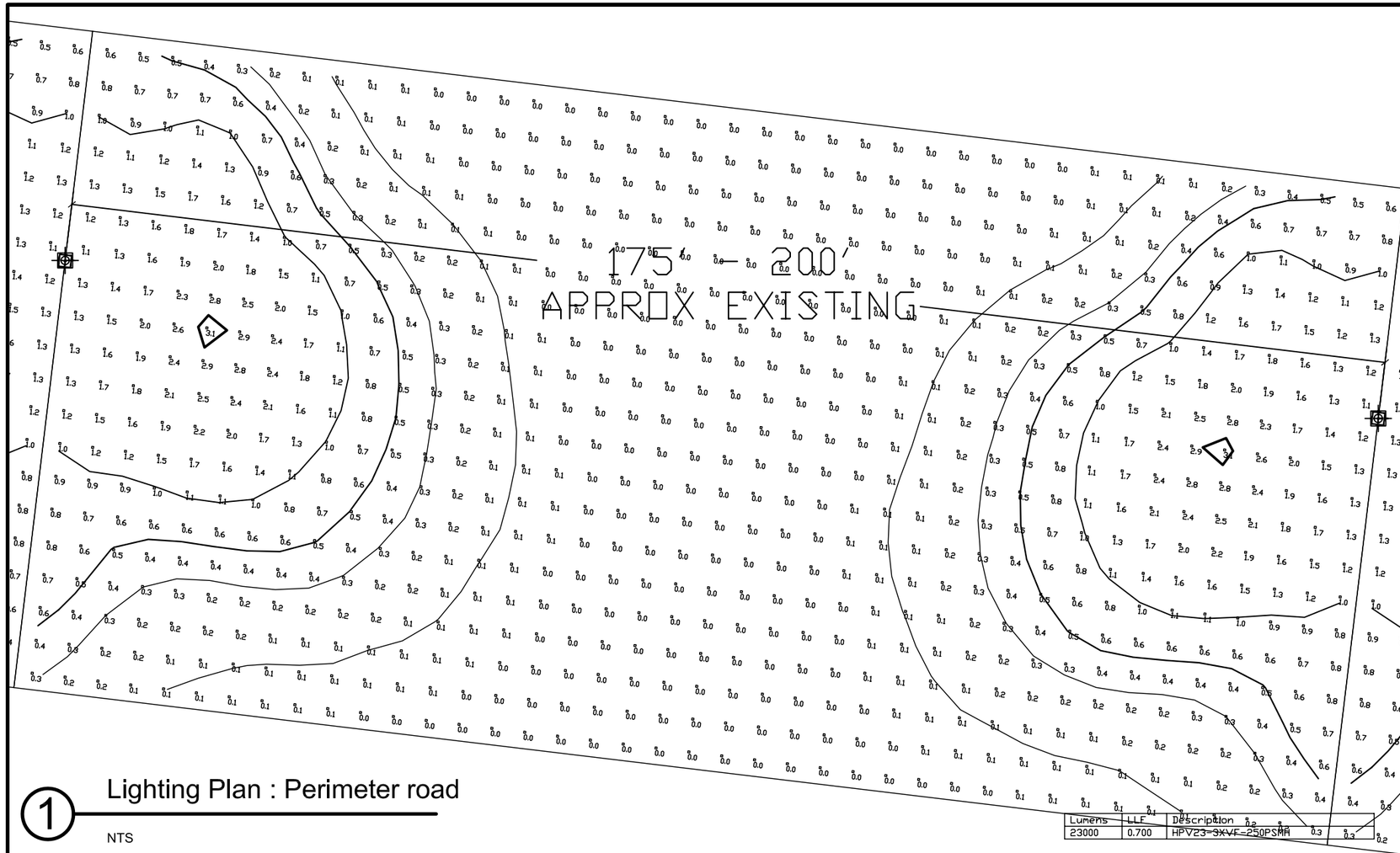

Lumens	LLF	Description
23000	0.700	HPV23-3XVF-250PSMH

1 Lighting Plan : Perimeter road

NTS

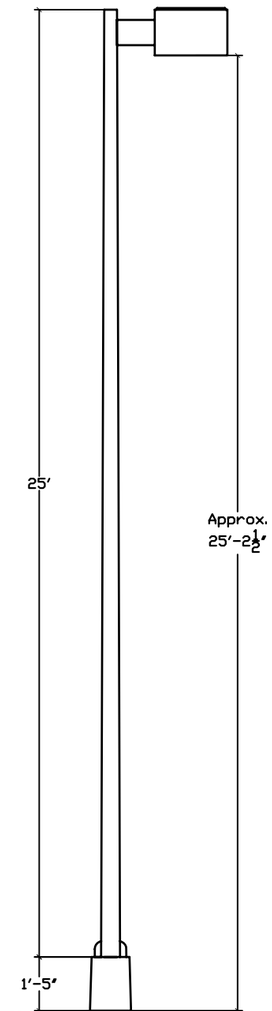

3 Fixture Type P3 Section

1/4"=1'-0"

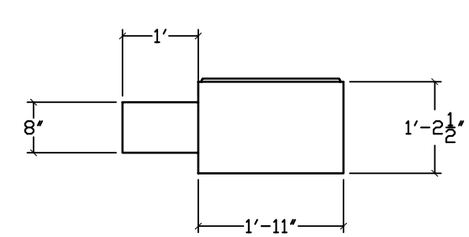

4 Fixture Type P3 Section

1/2"=1'-0"

Typical Uptown Campus Exterior Lighting : Perimeter Road

Specification: For Fixture Type P3

- Single fixture on arm mounted to 25' pole on transformer base, IES Type III distribution

Approved products:

- Gardco HPV23-1-3XVF-250PSMH-Voltage-BRP with one of the following ballasts:
- Pole: 25' fiberglass pole with aluminum transformer base. Whatley RT 34-25-AB-DBZ-SMS-DTZ or equivalent by PLP.

Lamps : GE MVR250/VBU/PA lamp. (GE, because that is the state contract supplier.)

Date: 05/20/08

Scale: Varies

Sheet No. LD3.212-A

Uptown Campus

Notes:

Perimeter Roadway

University at Albany

Lighting Masterplan

Albany, New York

Naomi Miller Lighting Design, LLC
46 23rd Street
Troy, NY 12180-1913 USA
518.272.2745 voice
info@nmlightingdesign.com;
www.nmlightingdesign.com
Naomi Johnson Miller, FIES, FIALD, LC

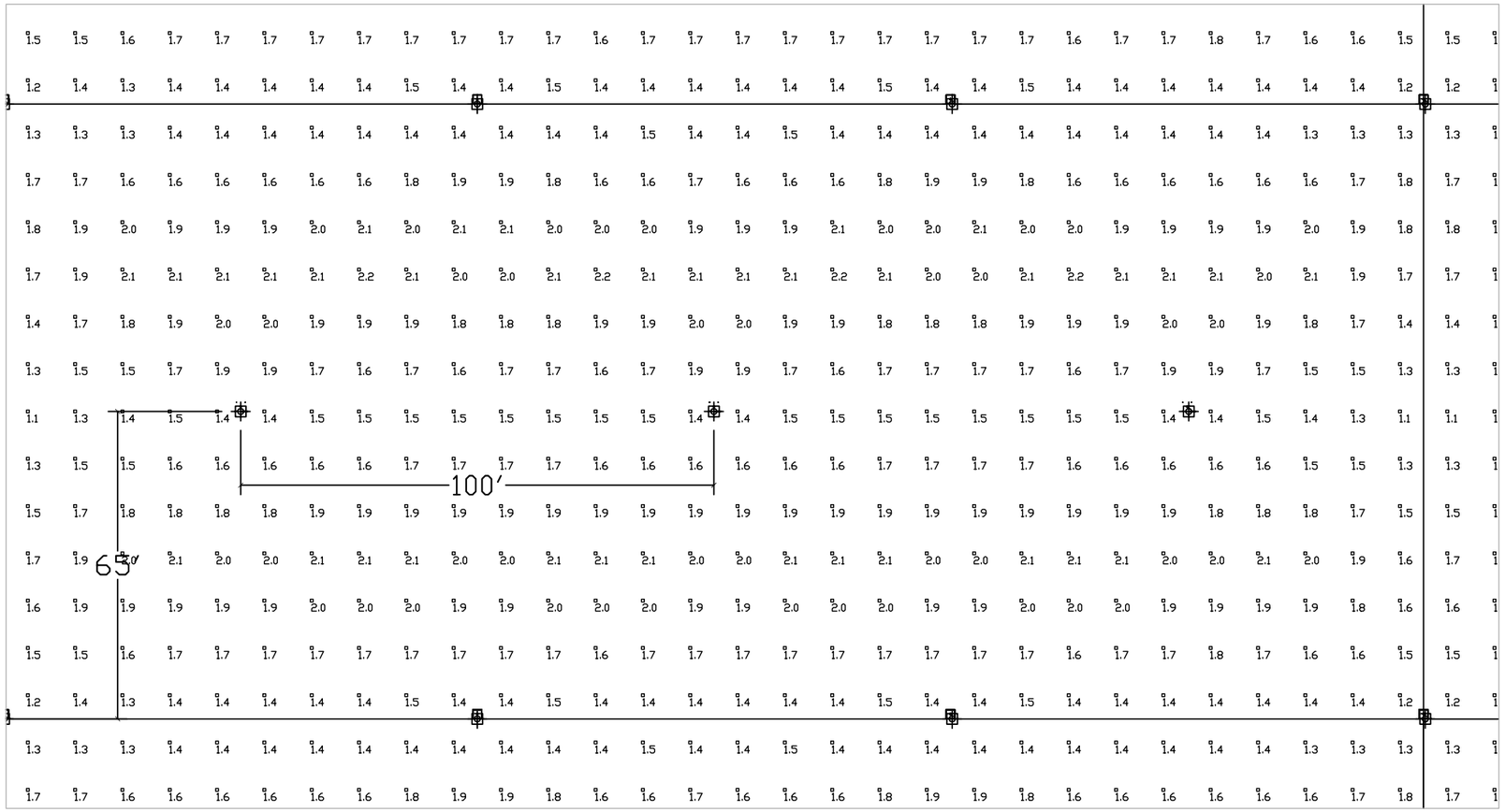

1 Lighting Plan : Parking Lot 1

NTS

Layout is shown reusing existing pole locations

Lumens	LLF	Description
23000	0.700	HPV23-5XVF-250PSMH

Typical Uptown Campus Exterior Lighting : Parking Lot

Specification: For Fixture Type P4

- Single fixture on arm mounted to 25' pole on transformer base, IES Type V distribution.

Approved products:

- Gardco HPV23-5XVF-250PSMH-Voltage-BRP with one of the following ballasts:
- Pole: 25' fiberglass pole with aluminum tranformer base. Whatley RT 34-25-AB-DBZ-SMS-DTZ or equivalent by PLP.

Lamps : GE MVR250/VBU/PA lamp. (GE, because that is the state contract supplier.)

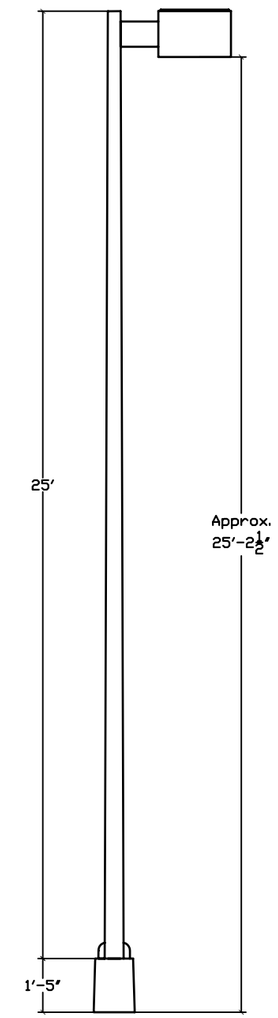

3 Fixture Type P4 Section

1/4"=1'-0"

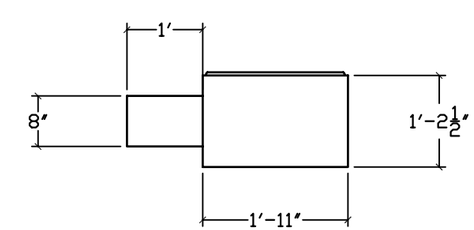

4 Fixture Type P4 Section

1/2"=1'-0"

Date: 05/20/08

Scale: Varies

Sheet No. LD3.212-B

Uptown Campus

Notes:

Parking Lot Lighting

University at Albany

Lighting Masterplan

Albany, New York

Naomi Miller Lighting Design, LLC
46 23rd Street
Troy, NY 12180-1915 USA
518.272.2745 voice
info@nmlightingdesign.com;
www.nmlightingdesign.com
Naomi Johnson Miller, FIES, FIALD, LC

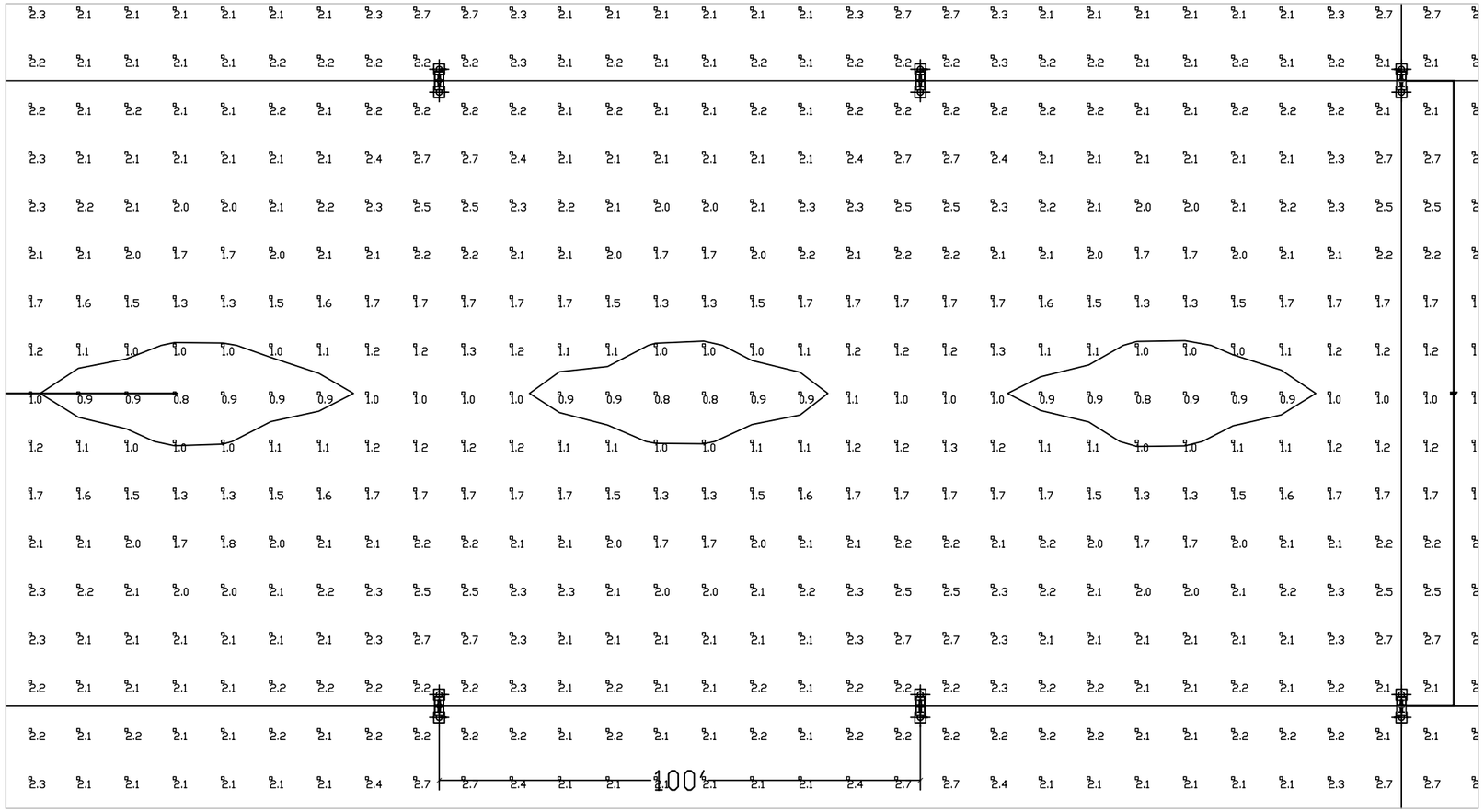

1 Lighting Plan : Parking Lot 1

NTS

Lumens	LLF	Description
23000	0.700	HPV23-5XVF-250PSMH

Typical Uptown Campus Exterior Lighting : Parking Lot (Alternative)

Specification: For Fixture Type P8

- Double fixture on arm mounted to 25' pole on transformer base, IES Type V distribution.

Approved products:

- Gardco HPV23-2@180-5XVF-250PSMH-Voltage-BRP with one of the following ballasts:
- Pole: 25' fiberglass pole with aluminum tranformer base. Whatley RT 34-25-AB-DBZ-SMS-DTZ or equivalent by PLP.

Lamps : GE MVR250/VBU/PA lamp. (GE, because that is the state contract supplier.)

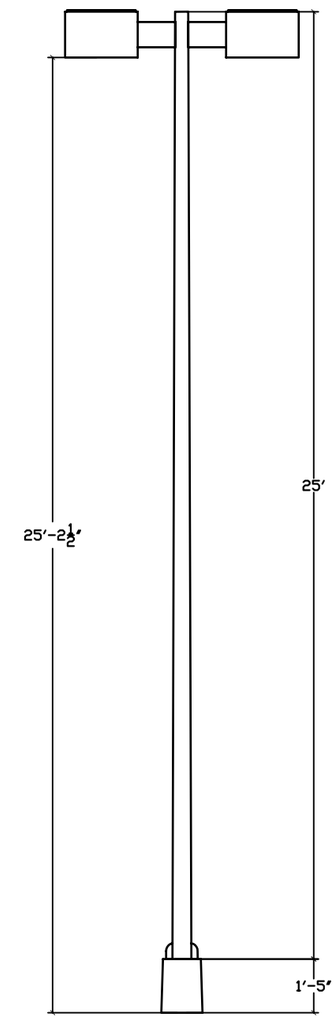

3 Fixture Type P8 Section

1/4"=1'-0"

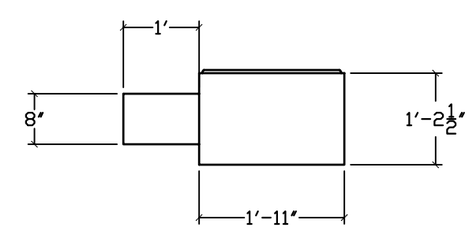

4 Fixture Type P8 Section

1/2"=1'-0"

Date: 05/20/08

Scale: Varies

Sheet No. LD3.212-C

Uptown Campus

Notes:

Parking Lot Lighting

University at Albany

Lighting Masterplan

Albany, New York

Naomi Miller Lighting Design, LLC
46 23rd Street
Troy, NY 12180-1915 USA
518.272.2745 voice
info@nmlightingdesign.com;
www.nmlightingdesign.com
Naomi Johnson Miller, FIES, FIALD, LC

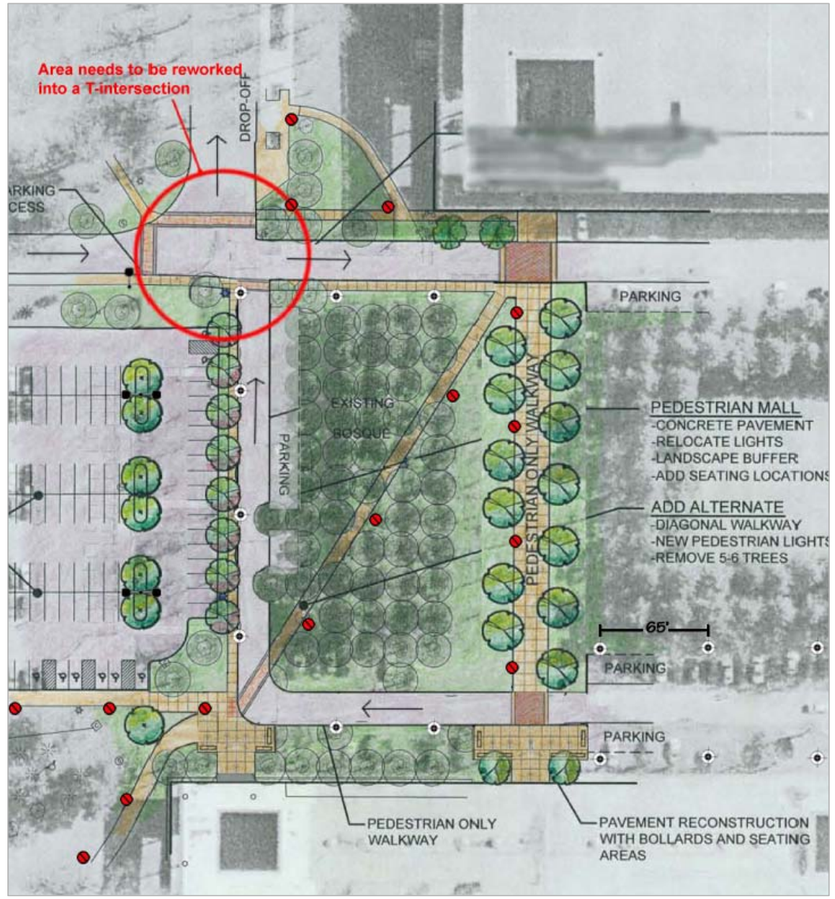

1 Lighting Plan : Roadway/ Pedestrian area near podium

NTS

Typical Uptown Campus Exterior Lighting : Pedestrian walkways

Specification: For Fixture Type P1

- Decorative Fixture approx. 14' tall
- Single post-top fixture mounted on 12' pole on transformer base, IES Type III distribution

Approved products:

- Cooper Lighting (Invue "Mesa") MSA-70W-MP-Voltage-3S-FG-BZ
- The fixture has a slipfitter that fits over a 3" O.D. tenon.
- Pole: 12' fiberglass pole with aluminum tranformer base. Whatley RT 34-12-AB-ALM-SMS.

Lamps : GE CMH70/U/830/MED/O lamp. (GE, because that is the state contract supplier.

2 Fixture Type P1

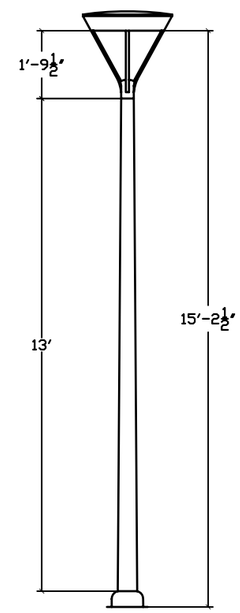

3 Fixture Type P1 Section

1/4"=1'-0"

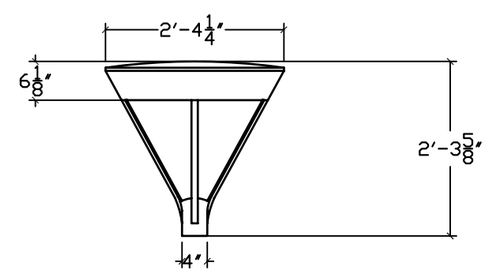

4 Fixture Type P1 Section

1/2"=1'-0"

Date: 05/20/08

Scale: Varies

LD3.212-E

Sheet No.

Uptown Campus

Notes:

Pedestrian Paths

University at Albany

Lighting Masterplan
Albany, New York

Naomi Miller Lighting Design, LLC
46 23rd Street
Troy, NY 12180-1913 USA
518.272.2745 voice
info@nmlightingdesign.com;
www.nmlightingdesign.com
Naomi Johnson Miller, FIES, FIALD, LC

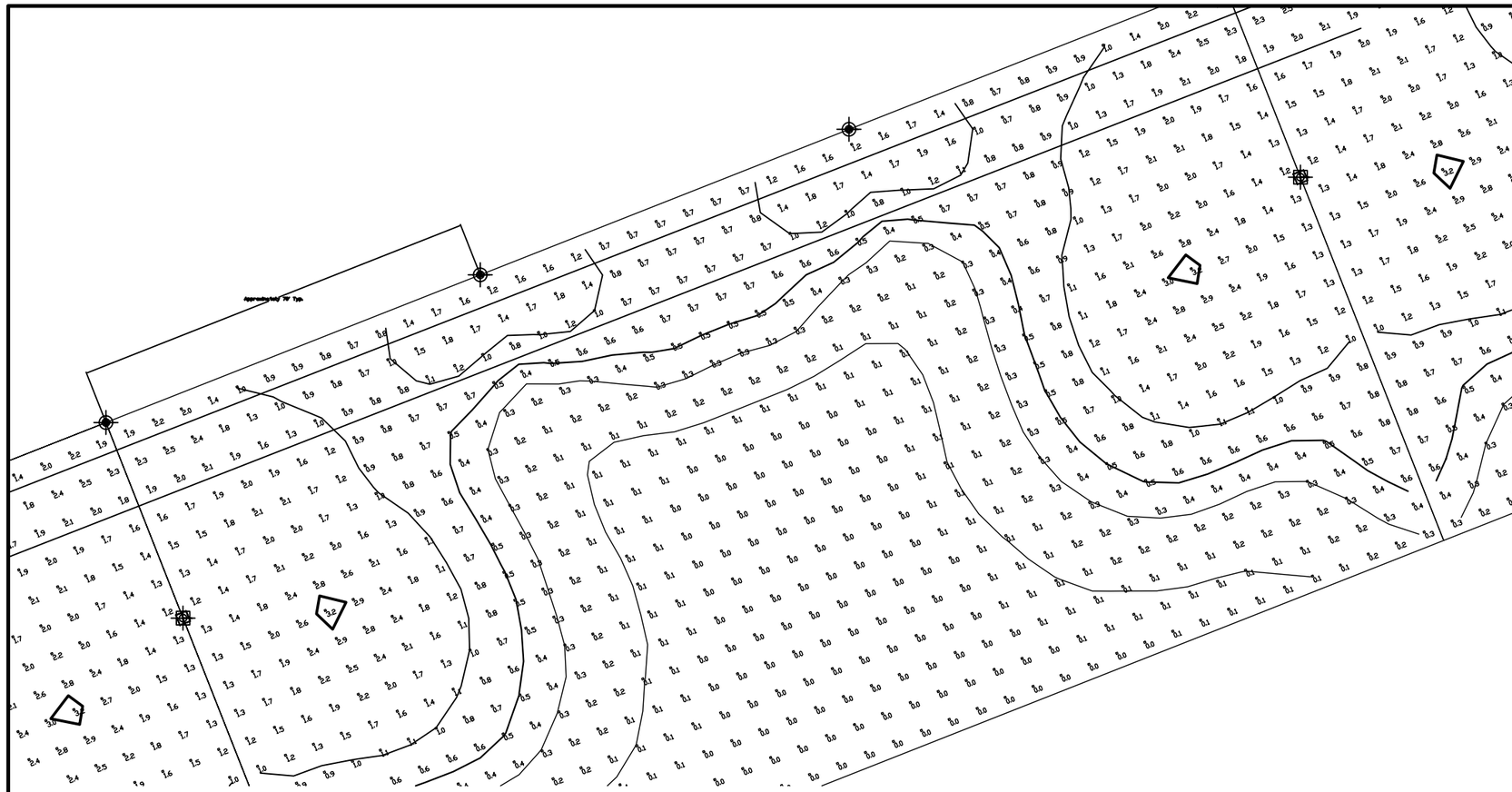

1 Lighting Plan : Purple path

NTS

Lumens	LLF	Description
23000	0.700	HPV23-3XVF-250PSMH
5500	0.700	MSA-175-MH-XX-3S-FG

Typical Uptown Campus Exterior Lighting : Purple path
Specification: For Fixture Type P1

- Decorative Fixture approx. 14' tall
- Single post-top fixture mounted on 12' pole on transformer base, IES Type III distribution

Approved products:

- Cooper Lighting (Invue "Mesa") MSA-70W-MP-Voltage-3S-FG-BZ
- The fixture has a slipfitter that fits over a 3" O.D. tenon.
- Pole: 12' fiberglass pole with aluminum tranformer base. Whatley RT 34-12-AB-ALM-SMS.

Lamps : GE CMH70/U/830/MED/O lamp. (GE, because that is the state contract supplier.

2 Fixture Type P1

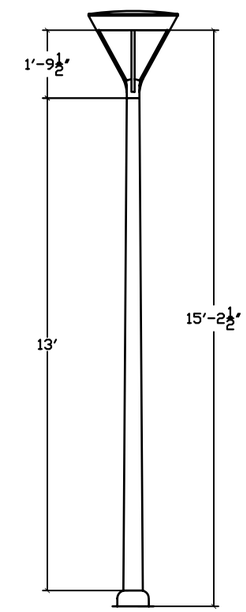

3 Fixture Type P1 Section

1/4"=1'-0"

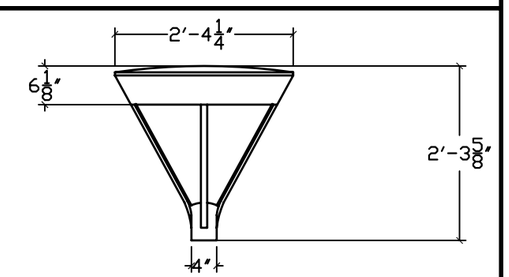

4 Fixture Type P1 Section

1/2"=1'-0"

Date: 05/20/08
Scale: Varies
Sheet No. LD3212-F

Uptown Campus
Notes:
Purple Path

University at Albany
Lighting Masterplan
Albany, New York

Naomi Miller Lighting Design, LLC
46 23rd Street
Troy, NY 12180-1913 USA
518.272.2745 voice
info@nmlightingdesign.com;
www.nmlightingdesign.com
Naomi Johnson Miller, FIES, FIALD, LC

3.2.2 PODIUM AREA LIGHTING

3.2.2.1 EXISTING CONDITIONS

At present the central plaza of the academic podium is lighted with the "box lights" along the building facades, supplemented with glaring high-wattage metal halide floodlights mounted along the edge of the canopy roof. The light levels produced are not adequate to see steps between podium levels, and the glare from the floodlights is uncomfortable and distracts from the architectural beauty of the campus in the evening. This is an area of high priority because it poses an unsafe condition for anyone who uses the Podium level campus at night.

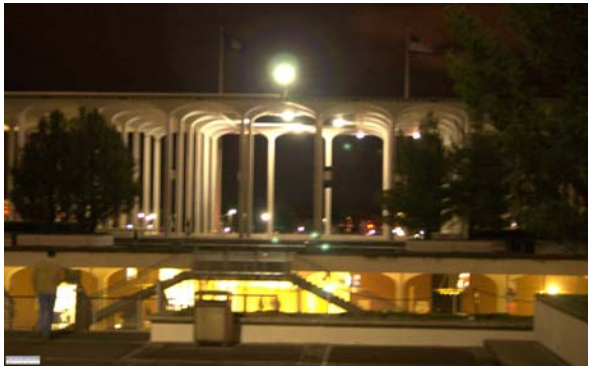

Figure 24 - Podium level lighting at night, showing floodlight mounted on roof

3.2.2.2 RECOMMENDATIONS ON IMPROVEMENTS TO THE PODIUM AREA LIGHTING

A four-prong approach to improving the lighting is recommended:

1. Remove the existing "box lights" and replace with new box lights that will preserve the historic appearance of the campus. See performance specification, below. **(Fixture Type S1).**
2. Remove existing floodlights at the roof level. Replace with a new die-cast aluminum accent light using 70W ED-17 metal halide lamp **(Fixture type X1),** mounted on arm that is hinge-mounted to allow relamping away from the edge of the roof. Fixtures are spaced 40' on center around the edge of the canopy to produce 1 to 3 footcandles on the plaza below the canopy edge. See detail. The fixture head is lowered into the 9" wide slot opening from above the canopy. Remote-mounted fiberglass ballast box and magnetic ballast located within 15' of lamp. May need long-range ignitor. 35 - 40 degree beam distribution and Solite (or equivalent small-prism) glass lens accessory. Kim Lighting "Scarab" 6750R-

NF-70PMH-Voltage-BL with ballast box. Minimum IP65 rating. Lamp: (1) CMH70/U/830/Med/O.

3. At the inside edge of the plaza area there are two sets of stairs to take pedestrians down to the fountain level. These stairs are poorly lighted at night. We recommend locating two of the campus standard post-top walkway lights flanking the stairs **(Fixture Type P1),** mounted to the planter. Only four of these are recommended, two at each stairwell, because we do not want to introduce many poles that would interfere with the original open, unobstructed design of the plaza. Lamp: (1) CMH70/U/830/MED/O.
4. The plaza has regularly-spaced planters with concrete benches, as well as a planter with bench along the inside edge of the plaza. These were originally lighted with recessed steplights, but few if any of these fixtures are still working. Provided that the electrical power is still available, we suggest mounting continous LED striplights under the benches. **(Fixture Type L9).** These will produce a low-level halo of light around each bench that will make the plaza edges visible at night, and produce a glow that will not interfere with the original Edward Durell Stone design intent. Osram Sylvania "Linearlight Multi Flex" LLMULTIFLX/THN/W3-827-3.2FT with Power supply and mounting channel and screws as required. Or, equivalent by International Light Technologies.

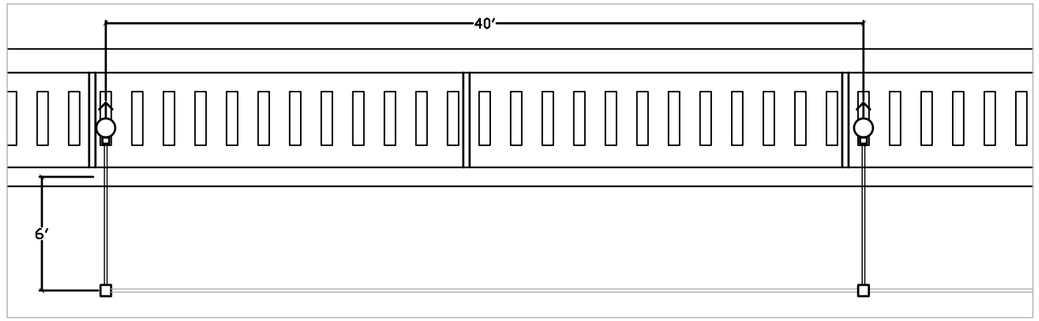

1 Roof Lighting Plan

1/8"=1'-0"

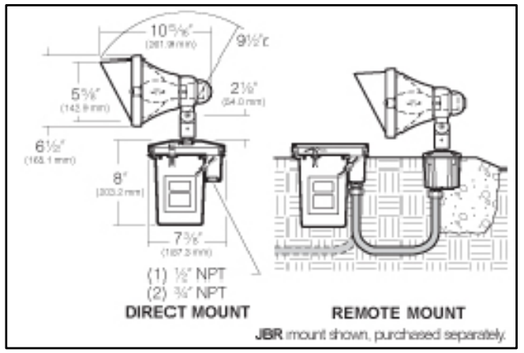

2 Fixture X1 Section

NTS

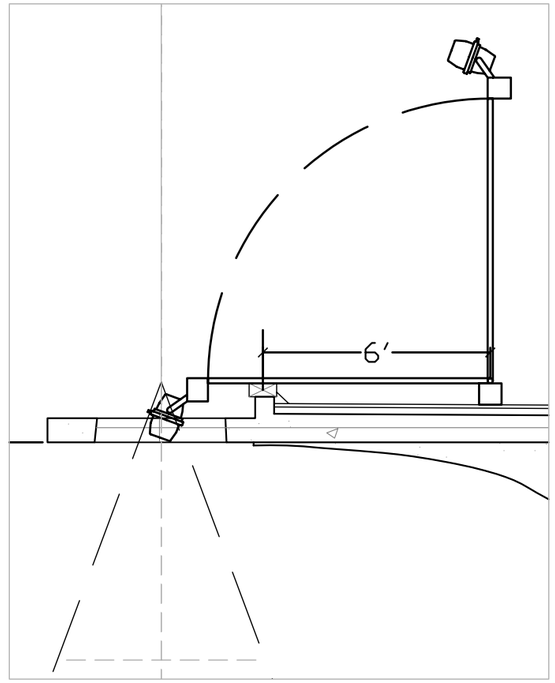

3 Mounting Detail

1/4"=1'-0"

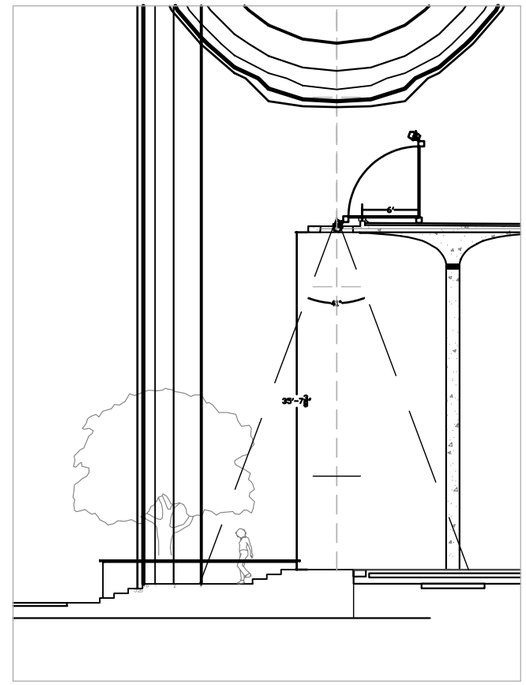

4 Lighting Calculation

1/16"=1'-0"

Roof Lighting

Performance specification: For fixture Type X1

- HID 40 degree Floodlight with hinged mounting for easier maintenance
- Nominal dimensions of 6.5" diameter with 6' long arm
- Remote magnetic ballast located on roof within 20' of lamp.
- Minimum efficiency :TBD.
- Minimum one-year warranty on luminaire, 3 year warranty on ballast.
- Voltage as specified by University at Albany.

Approved products:

- Allscape lighting FI22o series
- TBD

Lamps:

(1) 150W ED17 clear medium base ceramic Metal Halide by GE, Philips, Sylvania

Locating instructions

- Remove existing floodlights on roof.
- Replace with arealights with 6' arm.
- Locate the luminaire aiming down through the holes.
- Space luminaire 40' on center (O.C.) except for the middle as shown in drawing.

Target Illuminance:

- 1-2 fc minimum maintained

Target Power Density:

- TBD W/square foot allowed per New York Energy Code

Date: 04/24/08

Scale: Varies

Sheet No. LD322-A

Roof Lighting Detail

Notes: Scarab#6755-150W

University at Albany

Lighting Masterplan

Albany, New York

Naomi Miller Lighting Design, LLC
46 23rd Street
Troy, NY 12180-1913 USA
518.272.2745 voice:
info@nmlightingdesign.com:
www.nmlightingdesign.com
Naomi Johnson Miller, FIES, FIALD, LC

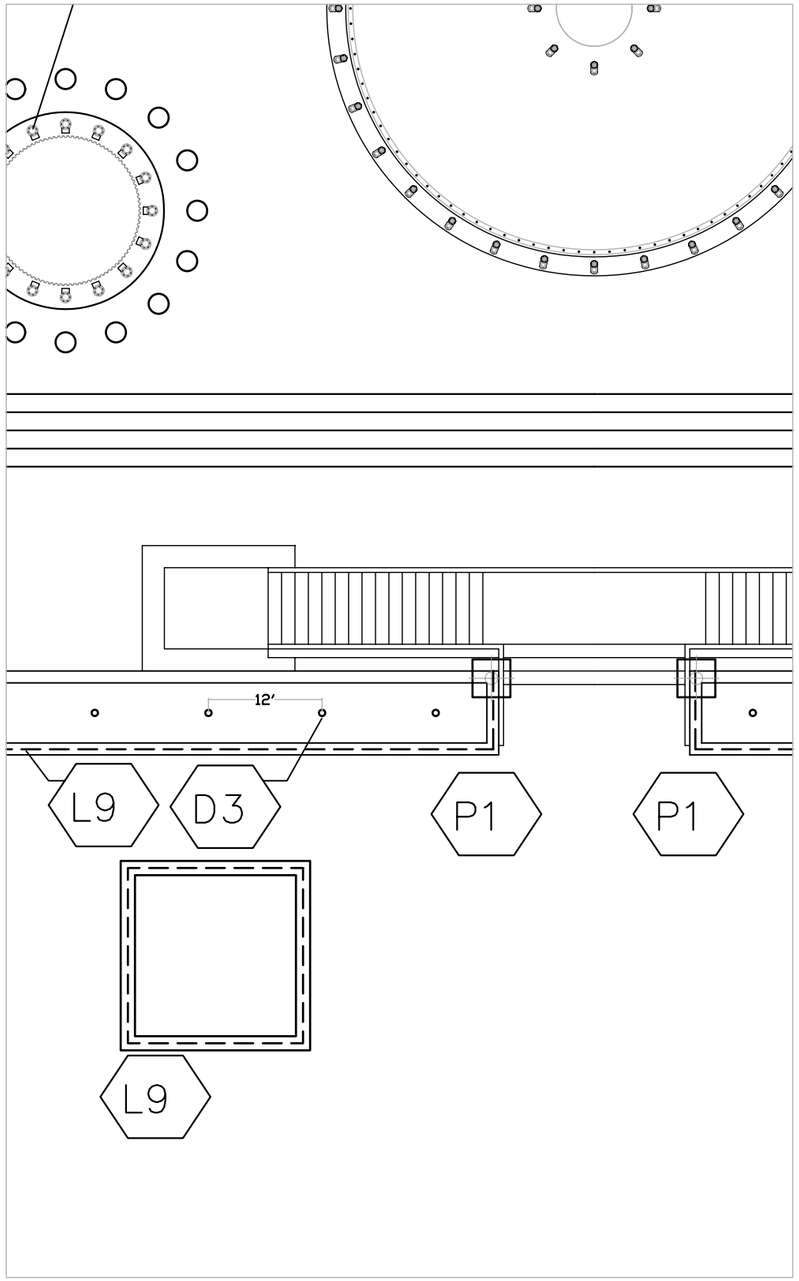

1 Podium Planter : Lighting Plan

1/16"=1'-0"

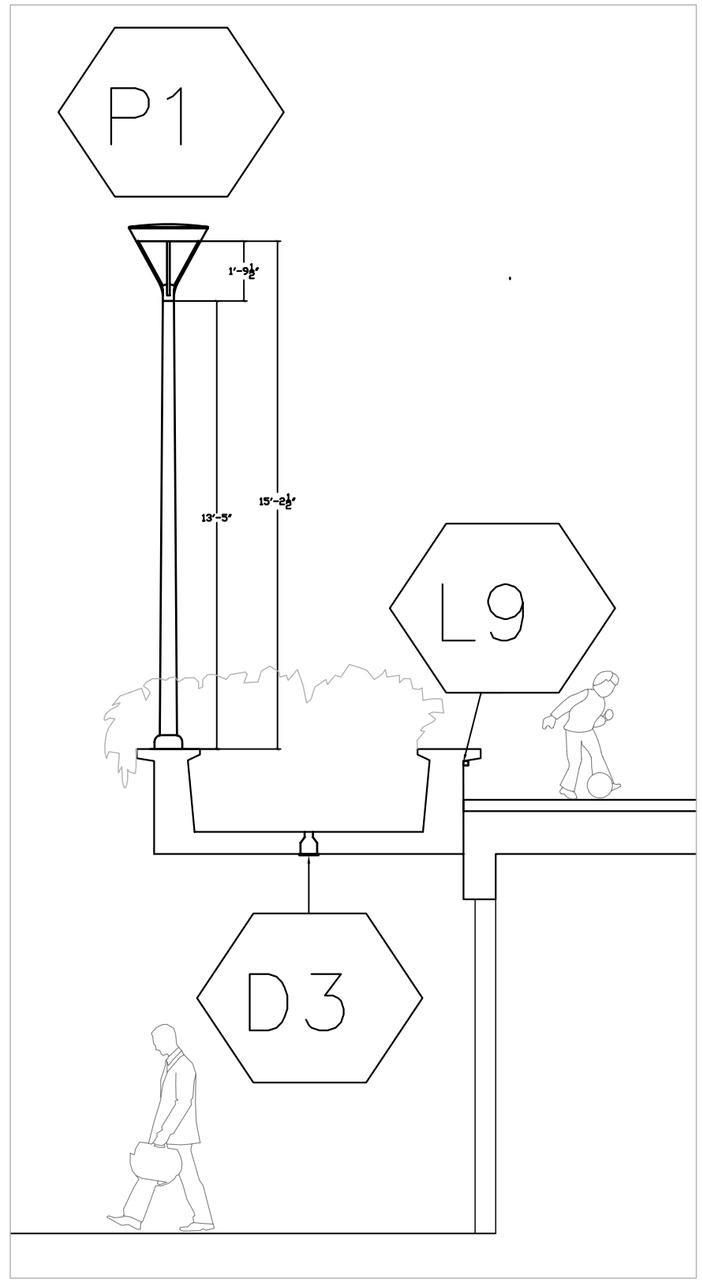

2 Podium Planter: Lighting Section

1/4"=1'-0"

3 Existing Podium Planter

NTS

Date: 04/24/08

Scale: Varies

LD3.222-B

Sheet No.

Podium Plaza

Notes:

Planter Edge

University at Albany

Lighting Masterplan

Albany, New York

Naomi Miller Lighting Design, LLC
46 23rd Street
Troy, NY 12180-1913 USA
518.272.2745 voice;
info@nmlightingdesign.com;
www.nmlightingdesign.com
Naomi Johnson Miller, FIES, FIALD, LC

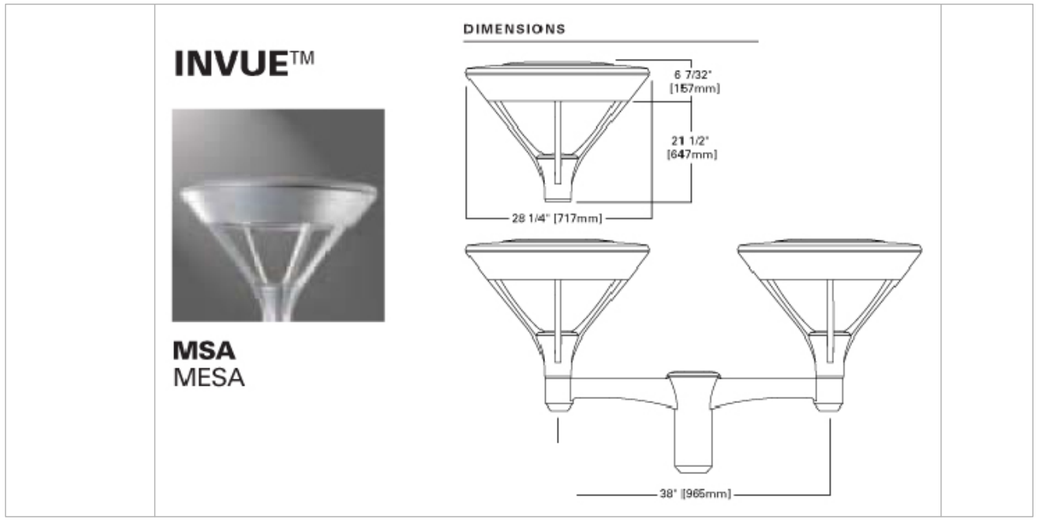

1 Fixture Type P1

1/8"=1'-0"

Podium : Post top light

Performance specification: For Fixture Type P1

- Post top walkway fixture, located along walkways or on podium level, near stairs to fountain. Single post-top fixture mounted on 12' pole on 17" tall transformer base, IES Type III distribution, flat lens and optics for Full Cutoff. The fixture has a slipfitter that fits over a 3" O.D. tenon. Integral pulse-start magnetic ballast for 70W ceramic halide lamp.

Approved products:

- Cooper Lighting (Invue "Mesa") MSA-70W-MP-Voltage-3S-FG-BZ
- or approved equivalent by Se'lux

Lamps:

- 1) CMH70/U/830/MED/O by GE or equal by sylvania or Philips.

Locating instructions

- Locate fixture 3' from center of the planter edge.

Target Illuminance:

- 1-2 fc maintained on upper stair landing

Target Power Density:

- Not applicable per New York Energy Code

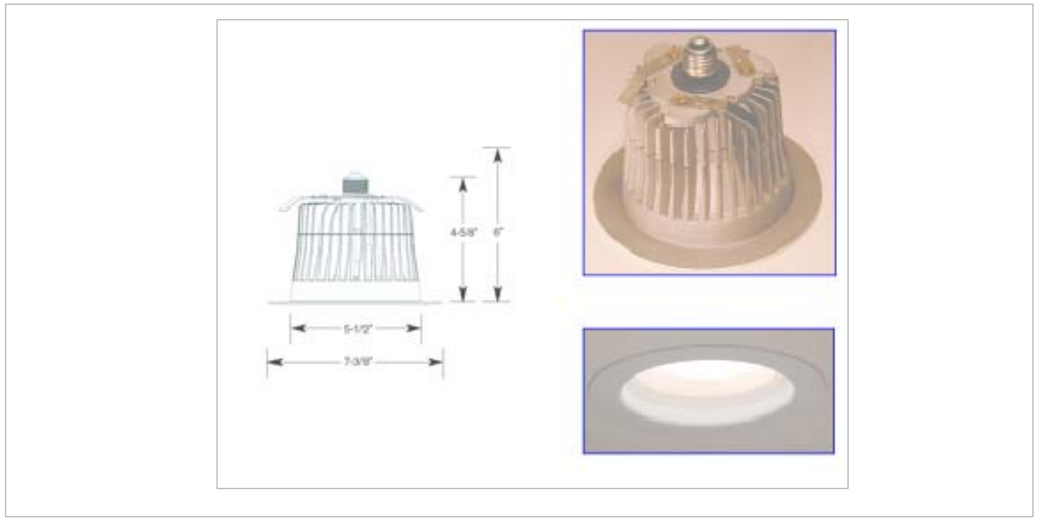

2 Fixture Type D3

1/4"=1'-0"

Podium : Downlight at podium planter

Performance specification: Fixture Type D3

- Recessed LED downlight with pewter painted vertically ribbed cone, 3500K (neutral) light color, and integral power supply. Mount within standard recessed 6" diameter downlight that is compatible with the new planter construction.

Approved products:

- LED Lighting Fixtures (LLF) Inc "LR6CP"
- Recessed housing: Halo H7ICATNB or H7ICTNB, H7T
  Or Capri CR1NB, CR1NBQP, CRR1NB, CRR1NBQP, QL1BB, QL1NBQP

Lamps:

- LED (included)

Locating instructions

- Locate fixture 12' O.C., to match original recesses downlight locations

Target Illuminance:

- 3-5 fc maintained on the walkwaye (0' AFF)

Target Power Density:

- Not applicable per New York Energy Code

Date: 04/24/08
Scale: Varies
Sheet No. LD3.222-C

Podium Area

Notes:

Plaza with Planter Edge

University at Albany
Lighting Masterplan
Albany, New York

Naomi Miller Lighting Design, LLC
46 23rd Street
Troy, NY 12180-1913 USA
518.272.2745 voice;
info@nmlightingdesign.com;
www.nmlightingdesign.com
Naomi Johnson Miller, FIES, FIALD, LC

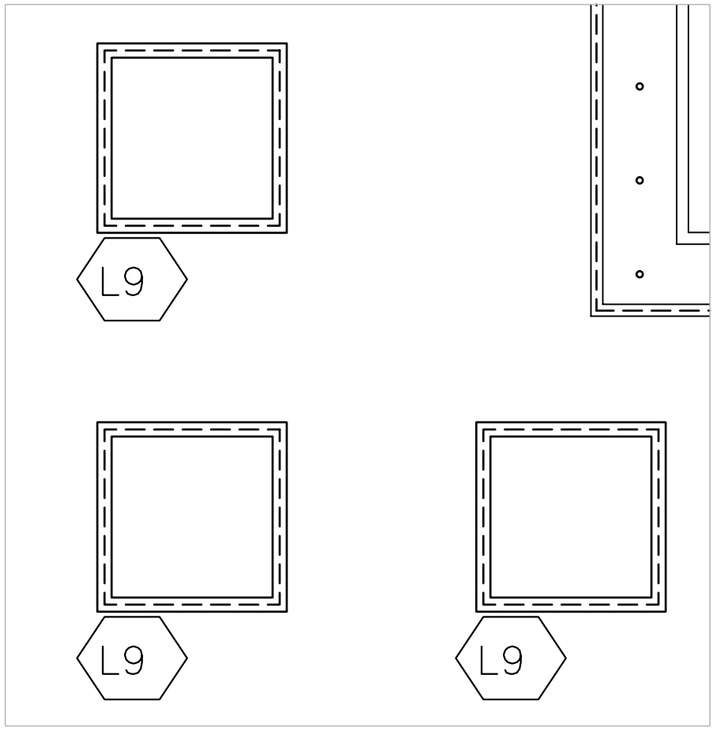

1 Under Bench Lighting Plan

1/16"=1'-0"

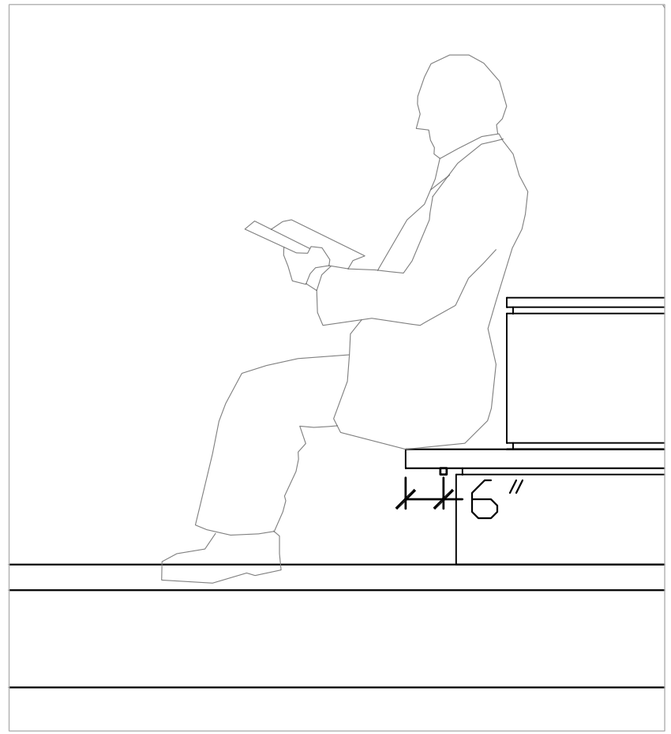

2 Under Bench Lighting Section

1/2"=1'-0"

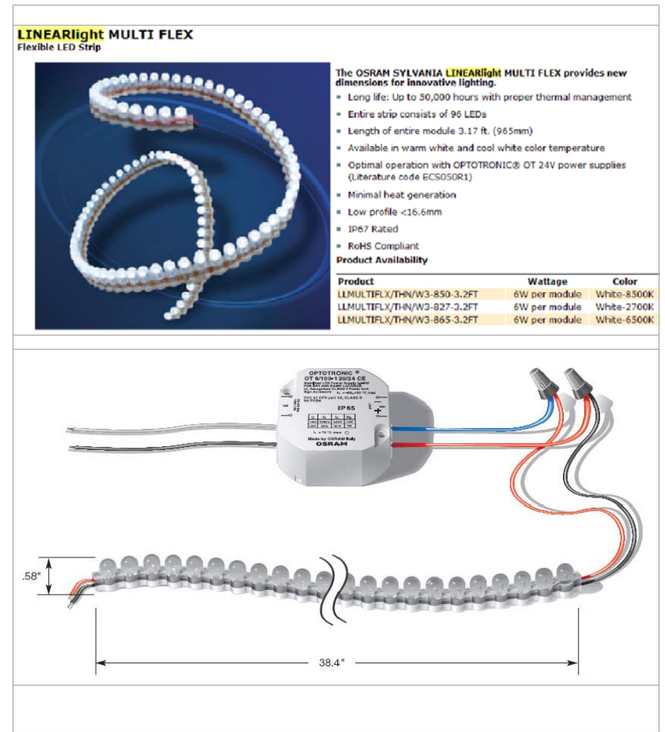

3 Under Bench Lighting Detail

NTS

Under bench lighting

Performance specification: For FixtureType L9
- Linear LED product with IP rated
- Maximum nominal dimensions of 1" wide x 1" height
- Minimum efficiency of 75%.
- Minimum one-year warranty on luminaire, 3 year warranty on ballast.
- Voltage as specified by University at Albany.

Approved products:
- LINEARlight MULTI FLEX, OSRAM SLYVANIA

Lamps:
- 6WLED 2700K

Locating instructions
- Provide surface-mounted conduit.
- Locate fixture with minimum 6" depth under the bench.

Target Illuminance:
- 0.5 fc around the bench.

Target Power Density:
- Not applicable per New York Energy Code
- Approximately 0.4-0.86 W/square foot depending on the room geometry and room size

Date: 05/20/08

Scale: Varies

LD3.222-D

Sheet No.

Tower Lighting

Notes:

University at Albany

Lighting Masterplan
Albany, New York

Naomi Miller Lighting Design, LLC
46 23rd Street
Troy, NY 12180-1913 USA
518.272.2745 voice;
info@nmlightingdesign.com;
www.nmlightingdesign.com
Naomi Johnson Miller, FIES, FIALD, LC

3.2.2.3 BUILDING-MOUNTED "BOX LIGHTS"

Remove existing box lights and replace one-for-one with the product described below. The box lights around the inner ring of the podium area are first priority, and other areas should be replaced according to the attached color-coded plan. Some of the box lights have been replaced with cylinder wall bracket fixtures in recent years, such as a group of lights around the Performing Arts Center.

Figure 25 – Replacement fixture around PAC that does not resemble original box light

These fixtures are still in good shape, but the cylinder doesn't match the shape of the original fixture. These should also be replaced so that the campus has a unified visual appearance, but can be last priority in the changeout.

Fixture Type S1 Performance specification:

- Direct/indirect wall sconce to replace existing sconce. Heavy gauge aluminum square cylinder housing, 7" square x 20.25" tall, welded to a wall case that houses the wiring compartment. Wall case is 18-3/4" tall x 7" wide x 3.5" deep and hook-mounts to a wall support, fixed with bolts, with an EPDM gasket to seal the luminaire from dust and water infiltration. Overall projection shall not exceed 10-1/2". Two high-frequency electronic ballasts, approved manufacturers of

  Advance, Vossloh-Schwabe, and OsramSylvania, are mounted to the heavy-gauge galvanized steel wall support. University to supply manufacturer with paint color chip to match original paint finish of box lights. For use on all exposed housing materials.
- Lamp sockets shall be mounted on sliding horizontal mounts, fastened down with wing nuts so that the upward lamp is aimed 15 degrees from vertical away from the mounting wall, and downward lamp is aimed 20 degrees from vertical away from the mounting wall. Lamp sockets shall be centered 1.5" from the inside face of the cylinder, so that when aimed, none of the direct light of the lamp strikes the inside of the cylinder.
- Lens frame is formed from low copper aluminum (356 alloy) to minimize corrosion, and silicone gasket to seal out contaminants. Lamp access through two captive screws in frame. Lenses in both top and bottom frame are "Solite" or equivalent microprism tempered glass, minimum 6" diameter or square, mounted so that top of lens is flush with the lens frame to allow water to run off. No baffle required in either aperture.
- The ballasts are wired with quick disconnect plugs, pre-wired at the factory.
- The socket shall be a 4KV pulse-rated medium base for a 39W Par30 metal halide lamp.
- All exterior hardware, including captive screws, are made of stainless steel.
- UL listed for Wet Locations.
- Minimum one-year warranty on luminaire, 3 year warranty on ballast.
- Manufacturer shall provide a working sample to lighting designer with submittal drawings.
- Voltage as specified by University at Albany.

Approved product: SDL "SLF2520-UAD-MOD-Solite-39Par30CMH-B-Voltage-Grey Painted Finish"
Lamps: (2) CMH39/Par30/FL25 lamps.

Approximate cost: $600 including lamp to the University at Albany when ordered in quantities of 50 or more.

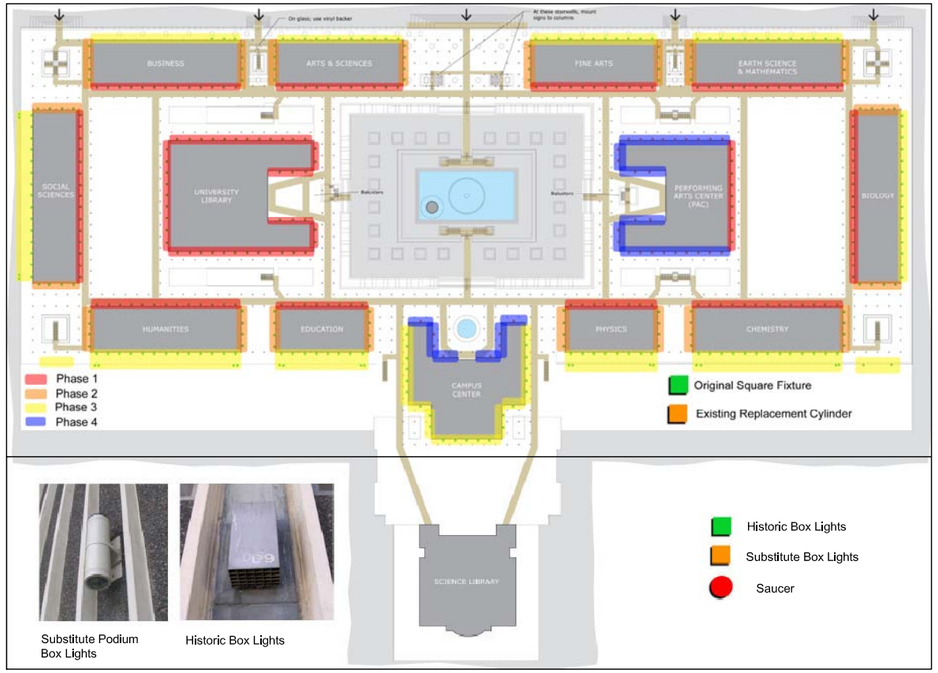

1 Podium Box Light Locations

NTS

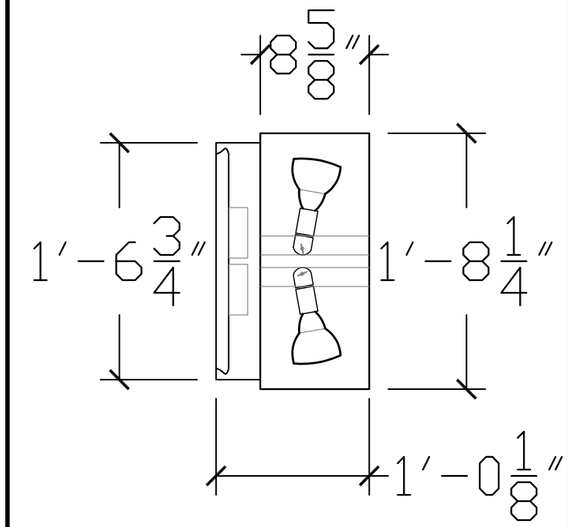

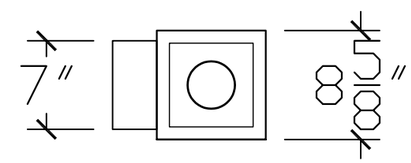

Podium : Building-mounted "Box Lights" (Toreplace original and substitute)

- Remove existing "box lights". Replace one-for-one with wall sconces as described

Performance specification : For FixtureType S1 :

- Direct/indirect wall sconce to replace existing sconce. Heavy gauge aluminum square cylinder housing, 8-5/8" square x 20.25" tall, welded to a wall case that houses the wiring compartment. Wall case is 18-3/4" tall x 7" wide and hook-mounts to a wall support, fixed with bolts, with an EPDM gasket to seal the luminaire from dust and water infiltration. Overall projection shall not exceed 12-1/8". Two high-frequency electronic ballasts, approved manufacturers of Advance, Vossloh-Schwabe, and OsramSylvania, are mounted to the heavy-gauge galvanized steel wall support. University to supply manufacturer with paint color chip to match original paint finish of box lights. For use on all exposed housing materials.
- Lamp sockets shall be mounted on sliding horizontal mounts, fastened down with wing nuts so that the upward lamp is aimed 15 degrees from vertical away from the mounting wall, and downward lamp is aimed 20 degrees from vertical away from the mounting wall. Lamp sockets shall be centered 2" from the inside face of the cylinder, so that when aimed, none of the direct light of the lamp strikes the inside of the cylinder.
- Lens frame is formed from low copper aluminum (356 alloy) to minimize corrosion, and silicone gasket to seal out contaminants. Lamp access through two captive screws in frame. Lenses in both top and bottom frame are "Solite" or equivalent microprism tempered glass, minimum 6" diameter or square, mounted so that top of lens is flush with the lens frame to allow water to run off. No baffle required in either apertue.
- The ballasts are wired with quick disconnect plugs, pre-wired at the factory.
- The socket shall be a 4KV pulse-rated medium base for a 39W Par30 metal halide lamp.
- All exterior hardware, including captive screws, are made of stainless steel.
- UL listed for Wet Locations.
- Minimum one-year warranty on luminaire, 3 year warranty on ballast.
- Manufacturer shall provide a working sample to lighting designer with submittal drawings.
- Voltage as specified by University at Albany.

Approved products:

- SDL "SLF2520-UAD-Solite-39Par30CMH-B-Voltage-Finish"

Lamps: (2) CMH39/Par30/FL25 lamps.

Date: 05/20/08

Scale: Varies

LD3223-A

Sheet No.

Uptown Campus

Notes:

Box Lights

University at Albany

Lighting Masterplan
Albany, New York

Naomi Miller Lighting Design, LLC
46 23rd Street
Troy, NY 12180-1913 USA
518.272.2745 voice
info@nmlightingdesign.com;
www.nmlightingdesign.com
Naomi Johnson Miller, FIES, FIALD, LC

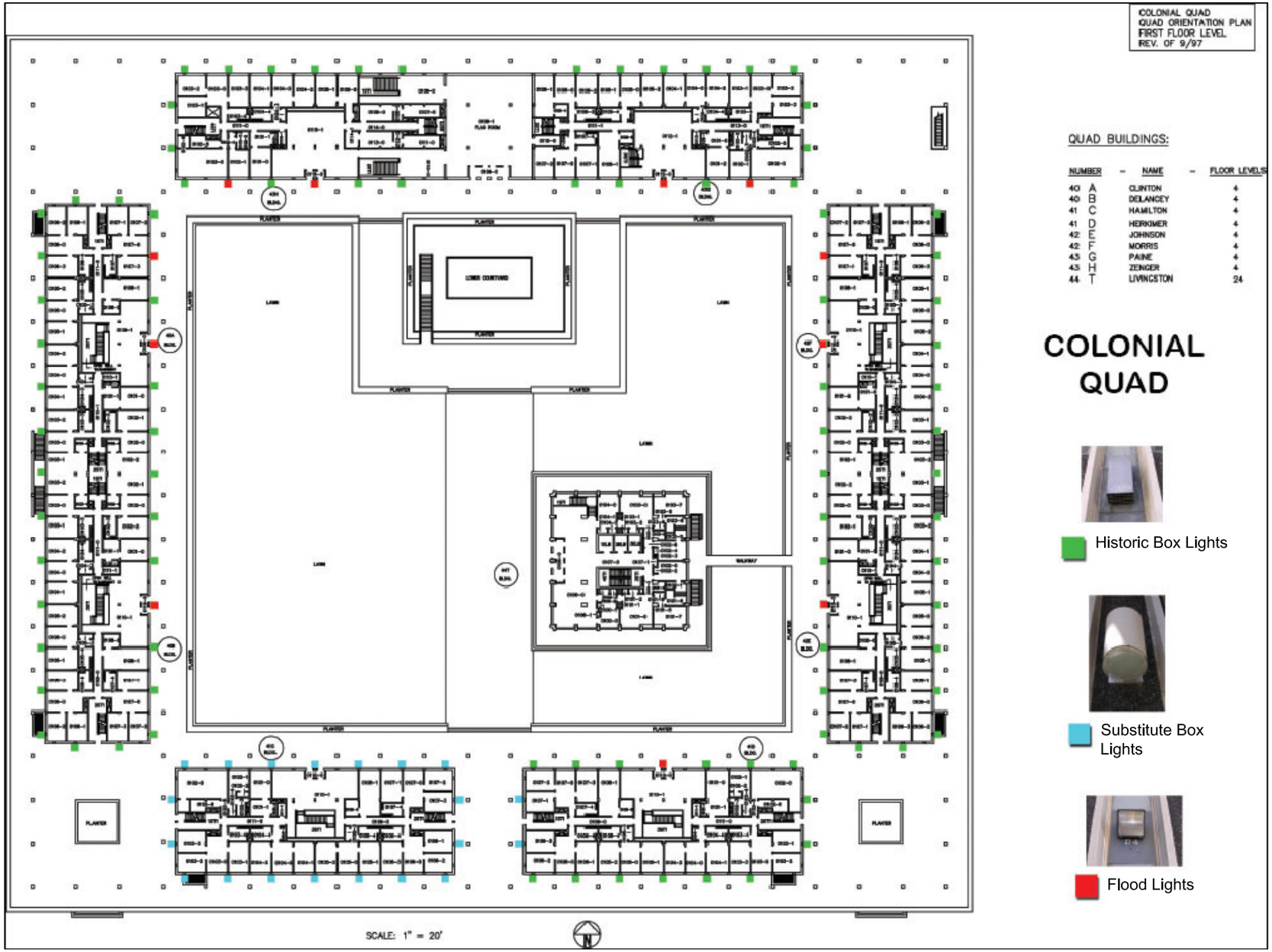

2 Colonial Quad Box Light Locations

NTS

Date: 05/20/08

Scale: NTS

Sheet No. LD3.223-C

Box Light Locations

Notes:

University at Albany

Lighting Masterplan
Albany, New York

Naomi Miller Lighting Design, LLC
46 23rd Street
Troy, NY 12180-1913 USA
518.272.2745 voice
info@nmlightingdesign.com;
www.nmlightingdesign.com
Naomi Johnson Miller, FIES, FIALD, LC

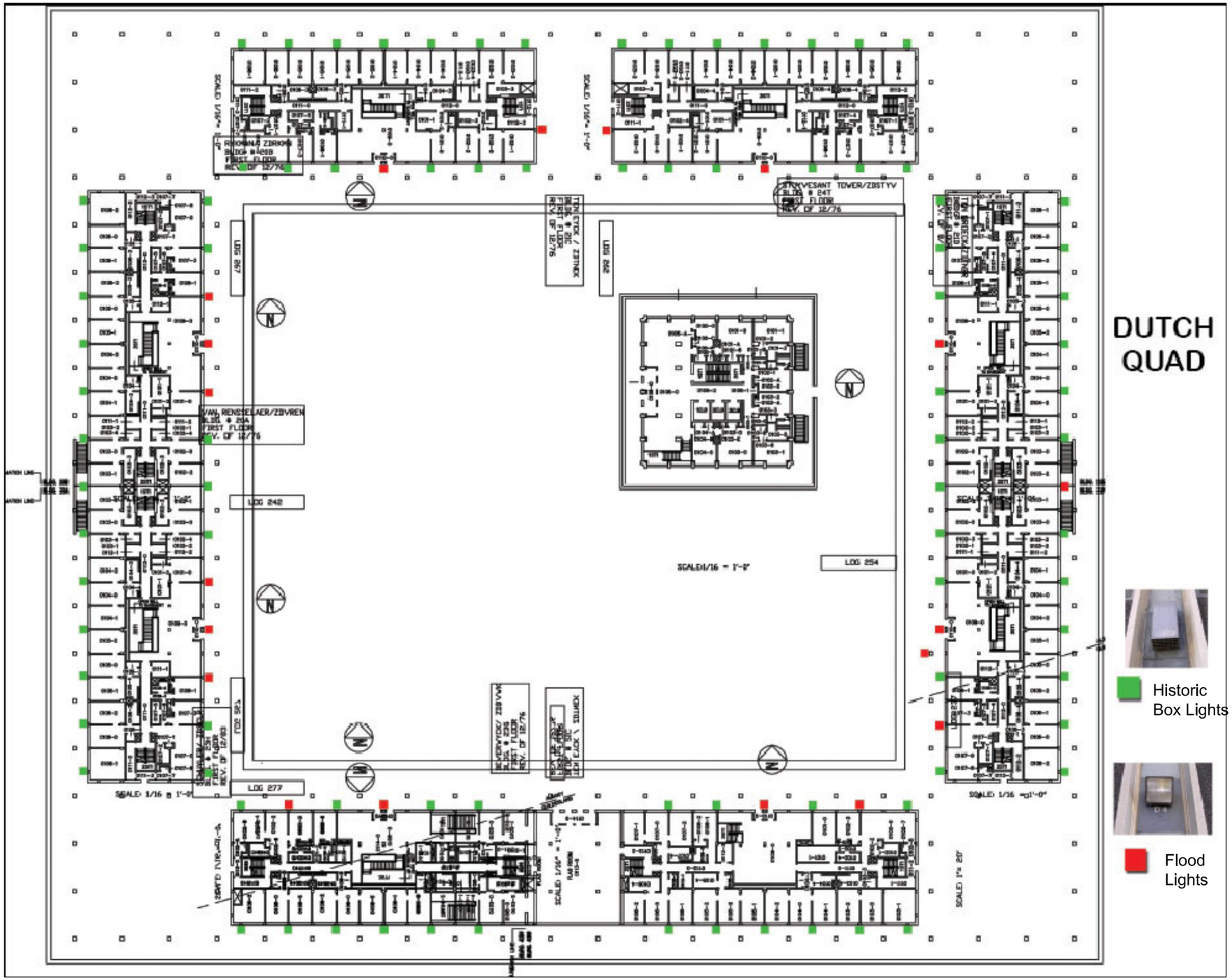

3 Dutch Quad Box Light Locations

NTS

Date: 05/20/08

Scale: NTS

Sheet No. LD3223-D

Box Light Locations

Notes:

University at Albany

Lighting Masterplan
Albany, New York

Naomi Miller Lighting Design, LLC
46 23rd Street
Troy, NY 12180-1913 USA
518.272.2745 voice
info@nmilightingdesign.com;
www.nmilightingdesign.com
Naomi Johnson Miller, FIES, FIALD, LC

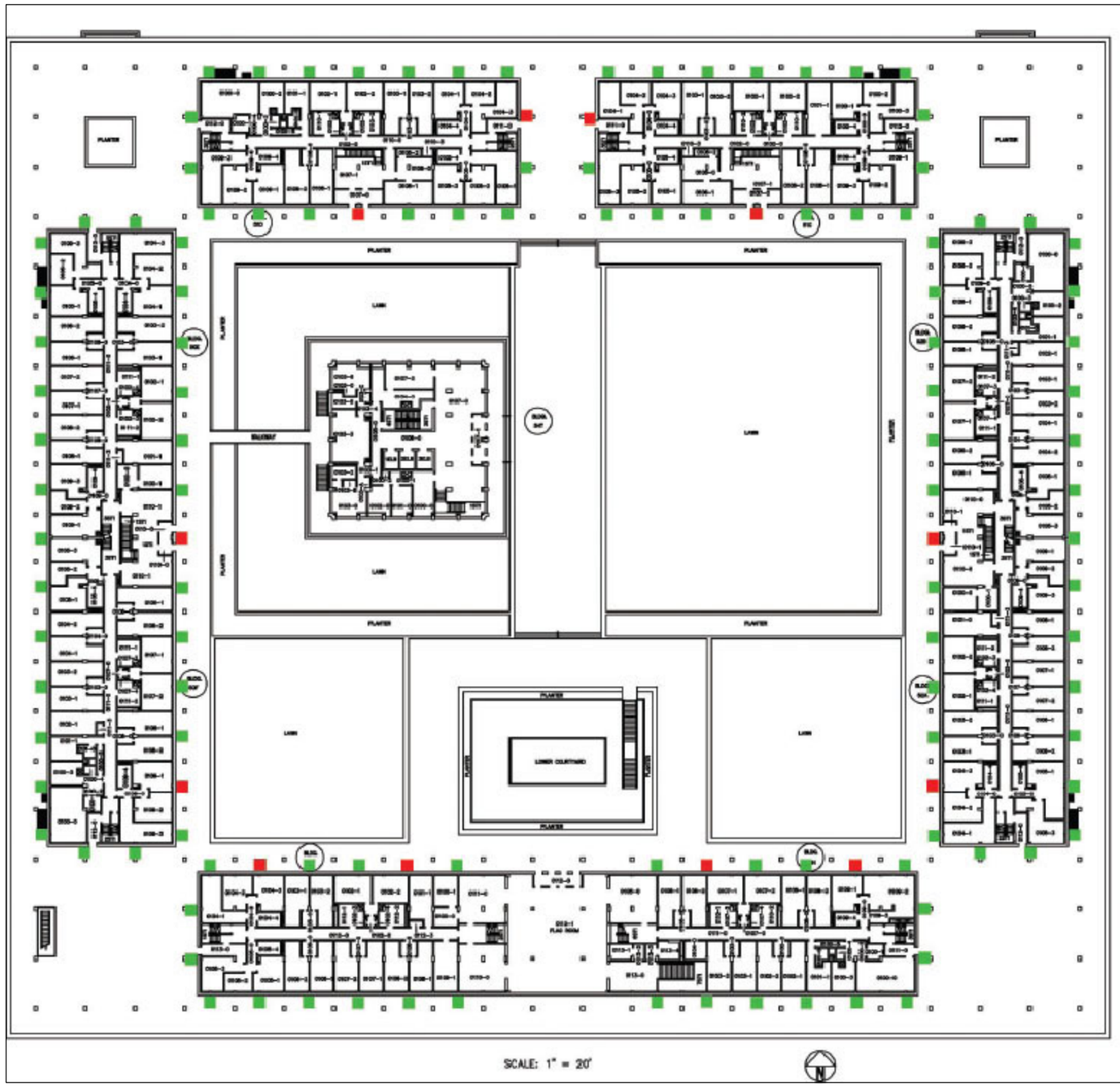

INDIAN QUAD
QUAD ORIENTATION PLAN
FIRST FLOOR LEVEL
REV. OF 6/97

QUAD BUILDINGS:

NUMBER		NAME	FLOOR LEVELS
52	A	ADIRONDACK	4
52	B	CAYUGA	4
51	C	MAHICAN	4
51	D	MONTAUK	4
50	E	ONEIDA	4
50	F	ONONDAGA	4
53	G	SENECA	4
53	H	TUSCARORA	4
54	T	MOHAWK TOWER	2-4

INDIAN QUAD

Historic Box Lights

Flood Lights

4 Indian Quad Box Light Locations

NTS

Date: 05/20/08

Scale: NTS

Sheet No. LD3.223-E

Notes:

University at Albany

Box Light Locations

Lighting Masterplan
Albany, New York

Naomi Miller Lighting Design, LLC
46 23rd Street
Troy, NY 12180-1913 USA
518.272.2745 voice
info@nmlightingdesign.com;
www.nmlightingdesign.com
Naomi Johnson Miller, FIES, FIALD, LC

3.2.2.4 PODIUM AREA EXTERIOR SKYLIGHTS AND "SAUCER" LIGHTS

Edward Durell Stone laid out the decorative outdoor saucer lights to be distinctive design elements that mark the main entrances to the campus and principal campus buildings, as well as to mark the corners of the podium complex. Sadly, the saucers located under the uncovered skylight openings at the podium corners and at the Collins Circle entrance have sustained damage due to weather, and have been removed. We recommend replacing the four saucers removed from the Collins Circle entrance, but only if a skylight is planned to enclose the concrete opening. (These saucers should be made to match the reworked existing exterior saucers.)

Figure 26 - Exterior Saucer Light

Figure 27 - View of exterior saucer light from PAC

There are stairwells on the four outer corners of the podium with square roof openings that have never been covered with protective skylights. Adding these skylights, so that they match the skylights in front of Campus Center and the Library, is critical for long-term maintenance reasons. First, they reduce the weather exposure for the podium floor, column structure, and stairwell so that the concrete does not degrade quickly. Replacing the stairs is an enormous expense, and until replaced the deteriorated concrete is unsightly and unsafe.

There has been much complaint regarding the difficulty of maintaining the saucers, and frequent requests to shorten the suspension length of the saucers. The following approach to refurbishing the existing fixtures is intended to address those complaints.

Fixture Type Q2 Performance Specification:

- Rework saucers to have sloped shiny-finish top for cleaning ease. Shorten the overall suspension length by 4' to raise the saucers to a height where they still have visual impact, but are less susceptible to vandalism.
- Remove the saucer's existing lighting components and improve the cleanability, durability, and efficiency of the saucer by replacing them with a 7.5" diameter x 12" tall cylinder fixture with wall bracket that will be fully concealed by saucer shape. Cylinder fixture shall have an IP65 rating and shall be fully enclosed,with glass obscuring lens on uplight and downlight. Integral ignitor and magnetic Pulse-Start ballast. White polyester powdercoat paint finish. 150W ED-17 lamp. Lamp accessible from below by removing "snowflake" grille and removing three Allen head screws to remove bottom lens ring.

Approved luminaire: Gardco 301-EW-L-150CMH-Voltage-WP
Approved lamp: CMH150/U/830/MED/O
Approved restoration manufacturer: Klemm Reflector, Baldinger Lighting.

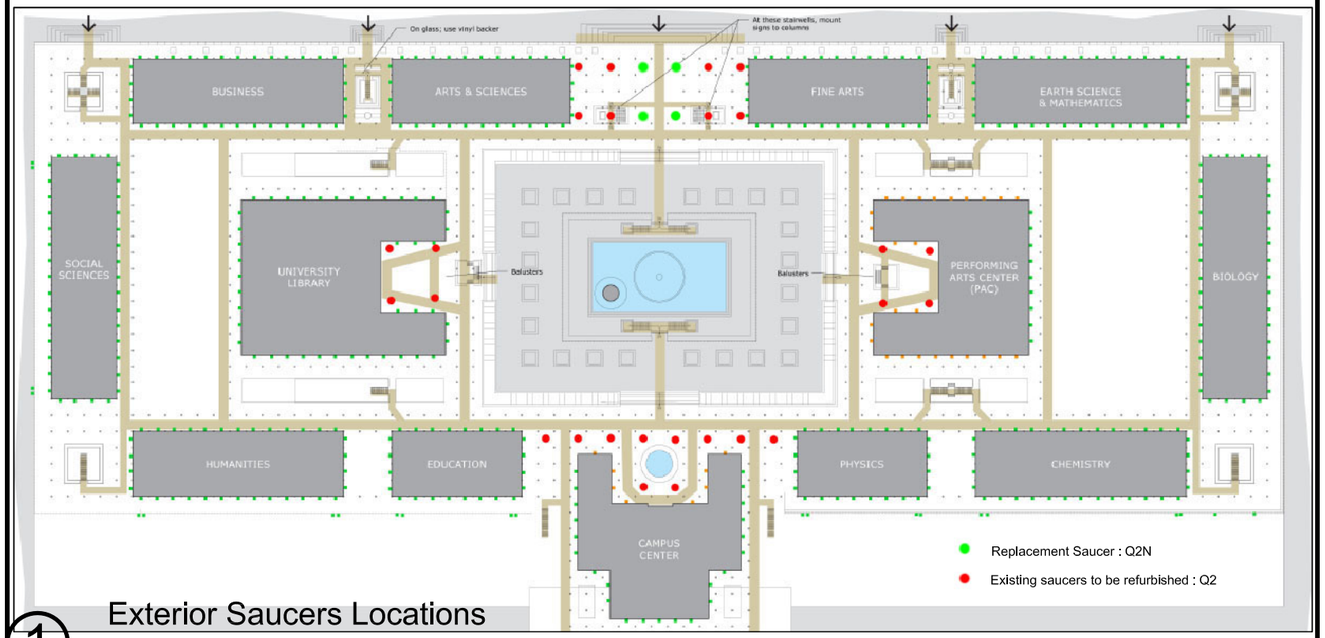

1 Exterior Saucers Locations

NTS

Note: Additional Saucer located at Health Services Building

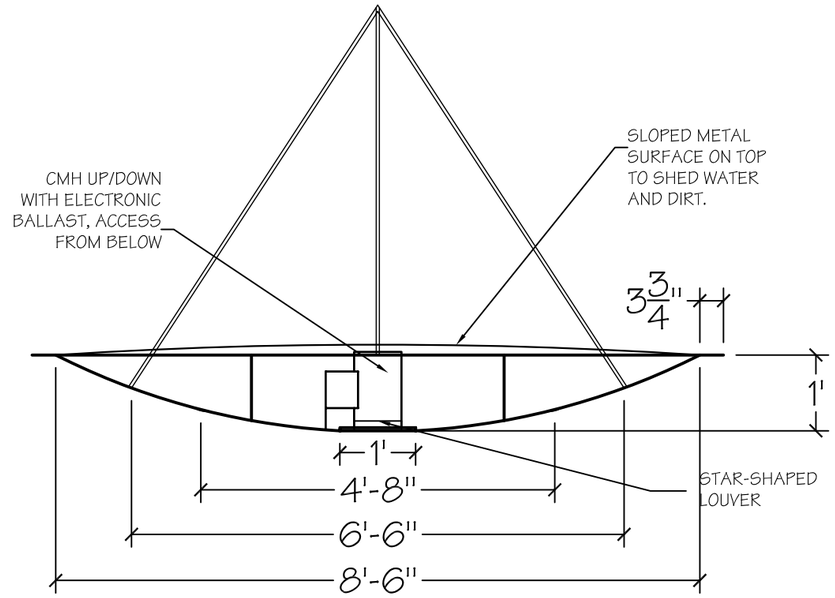

2 Exterior Saucer Section

1/2"=1'-0"

Exterior Saucers : Fixture Type Q2

Performance specification:

- Rework saucers to have sloped shiny top for cleaning ease. Shorten the overall suspension length by 4' to raise the saucers to a height where they still have visual impact, but are less susceptible to vandalism.
- Remove the saucer's existing lighting components and improve the cleanability, durability, and efficiency of the saucer by replacing them with a 7.5" diameter x 12" tall cylinder with wall bracket that will be fully concealed by saucer shape. IP65 rating on cylinder. Fully enclosed up and down with glass obscuring lens on uplight and downlight. Integral ignitor and magnetic PS ballast. White polyester powdercoat paint finish. 150W ED-17 lamp. Lamp accessible from below by removing "snowflake" grille and removing 3 Allen head screws to remove bottom lens ring.

Approved luminaire: Gardco 301-EW-L-150CMH-Voltage-WP
Approved lamp: CMH150/U/830/MED/O
Approved restoration manufacturer: Klemm Reflector, Baldinger Lighting.

Exterior Saucers : Fixture Type Q2N

- New saucer to match Q2

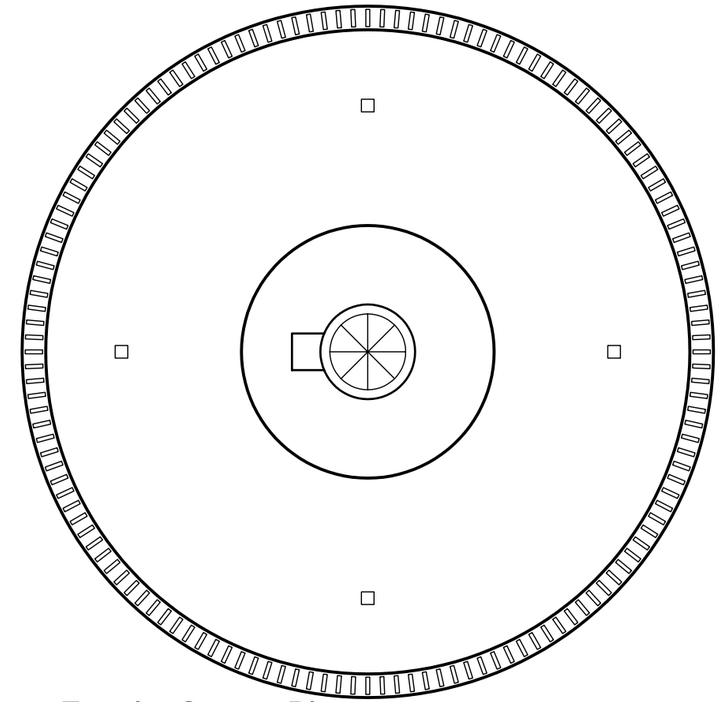

3 Exterior Saucer Plan

1/2"=1'-0"

Date: 05/20/08
Scale: Varies
Sheet No. LD3.224

Exterior Saucers

Notes:

University at Albany
Lighting Masterplan
Albany, New York

Naomi Miller Lighting Design, LLC
46 23rd Street
Troy, NY 12180-1913 USA
518.272.2745 voice
info@nmlightingdesign.com
www.nmlightingdesign.com

3.2.2.5 FOUNTAIN AND POND

3.2.2.5.1 Existing Conditions

The podium area fountain has 32 incandescent under-water uplights located in a circle to uplight the water jets. Most of these are no longer working because they are corroded or have leaked over the years. There are also 32 round coverplates on the exposed concrete base of the tower, evidence of a series of uplights originally designed to streak upward onto the fluted concrete tower edges. No one remembers when these uplights were disabled or removed. The lighting system is no longer serviceable, except for the orange glow at the top of the tower. The orange tower light (High Pressure Sodium) is distinctive and should remain. HPS is very efficient and long-lasting, so unless the fixture is no longer serviceable, it should remain as is.

Figure 28 - Fountain outer ring for lighting and water jets

Figure 29 - Plaza Fountain

Figure 30 - Tower base and surrounding mushrooms

Figure 31 - Fountain inner ring for lighting

3.2.2.5.2 Recommended Improvements

The fountain is a source of pride and identity for the campus, and we would like it to remain so, and even become a more prominent meeting place for students at night. Edward Durell Stone's original lighting locations still make sense. Investigate whether the uplights recessed into the concrete base of the tower can be removed and replaced with new 39W ceramic metal halide uplights with a narrow distribution. (**Fixture Type Z2**.)

Consider replacing the underwater lighting system with a programmable color-changing LED underwater light (**Fixture Type Z1**, Hydrel 4426-B-60LED-RGB-120-MFL-FLC-BM-3-Channel-DDX-length of cable). This would restore the capability of producing the same effect as produced by the original underwater lights because the Red/Green/Blue LEDs when operated at full output deliver white light. However, the fixtures can also be programmed to produce whimsical color effects and even color chases for special events (purple and orange for basketball games, for example) or for parties. This would require a simple color controller with a "DMX" protocol and a programming interface.

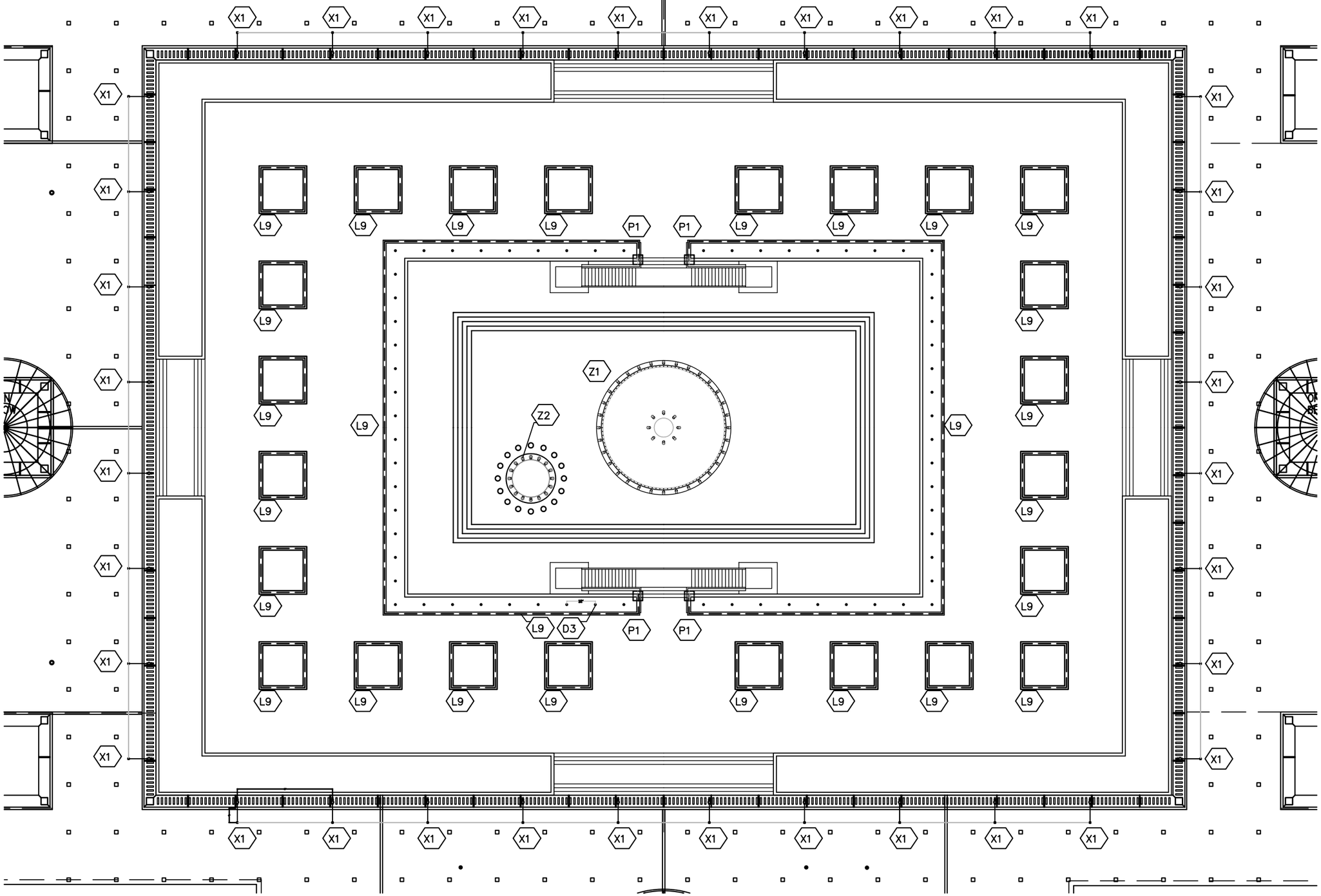

1 Lighting Plan: Podium

NTS

Date: 05/20/08

Scale: NTS

Sheet No. LD3225-A

Lighting Plan

Notes:

Podium

University at Albany

Lighting Masterplan
Albany, New York

Naomi Miller Lighting Design, LLC
46 23rd Street
Troy, NY 12180-1913 USA
518.272.2745 voice;
info@nmlightingdesign.com;
www.nmlightingdesign.com
|Naomi Johnson Miller, FIES, FIALD, LC

Note: Conceptual plan only. Do not scale.

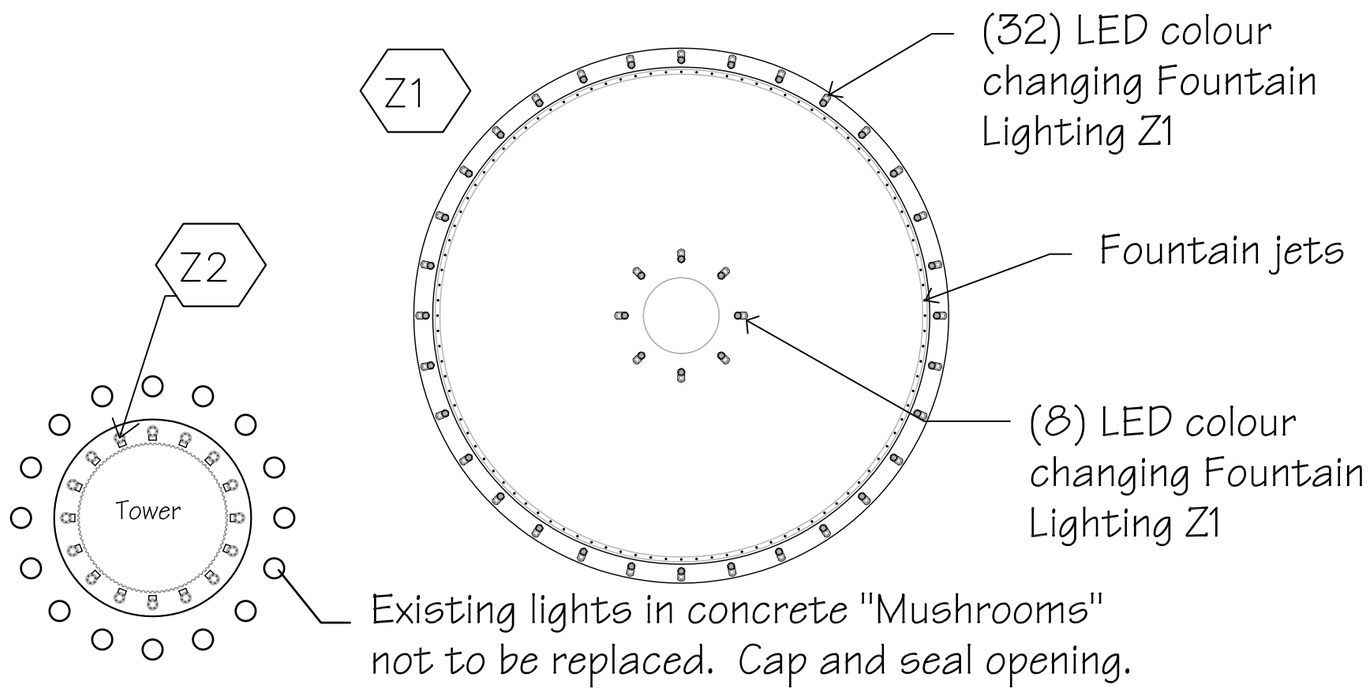

1 Fountain Lighting Plan

1/16"=1'-0"

Date:05/20/08

Scale: NTS

LD3225-B

Sheet No.

Fountain Lighting Plan

Notes:

Podium

University at Albany

Lighting Masterplan

Albany, New York

Naomi Miller Lighting Design, LLC
46 23rd Street
Troy, NY 12180-1913 USA
518.272.2745 voice;
info@nmlightingdesign.com;
www.nmlightingdesign.com
Naomi Johnson Miller, FIES, FIALD, LC

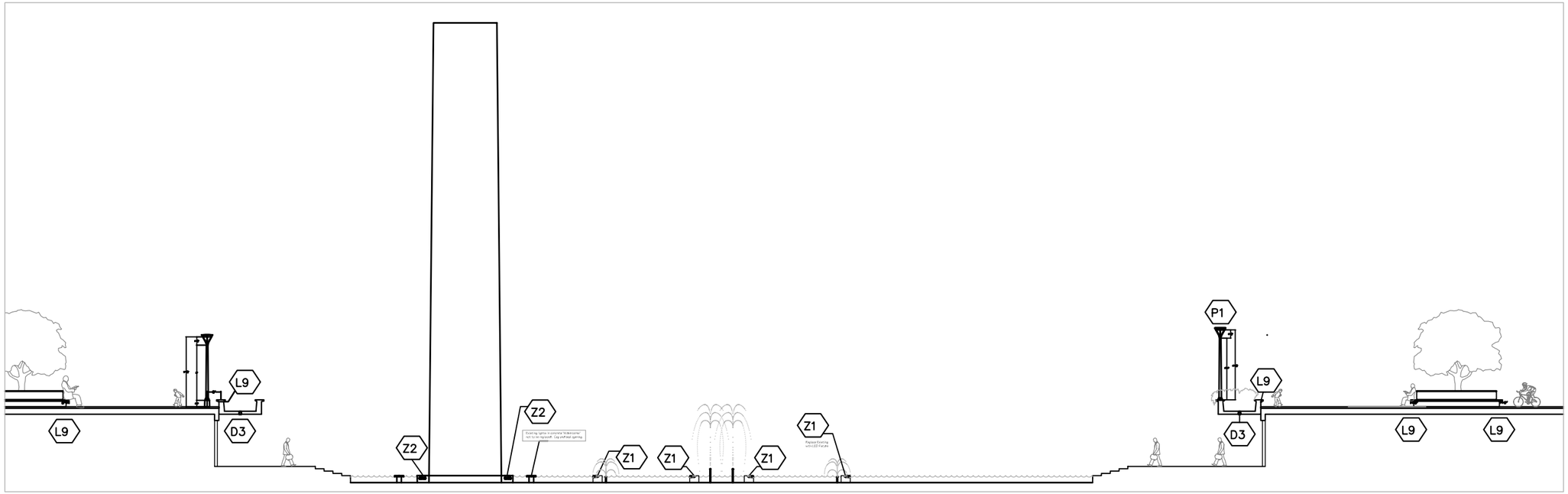

1 Fountain Section

NTS

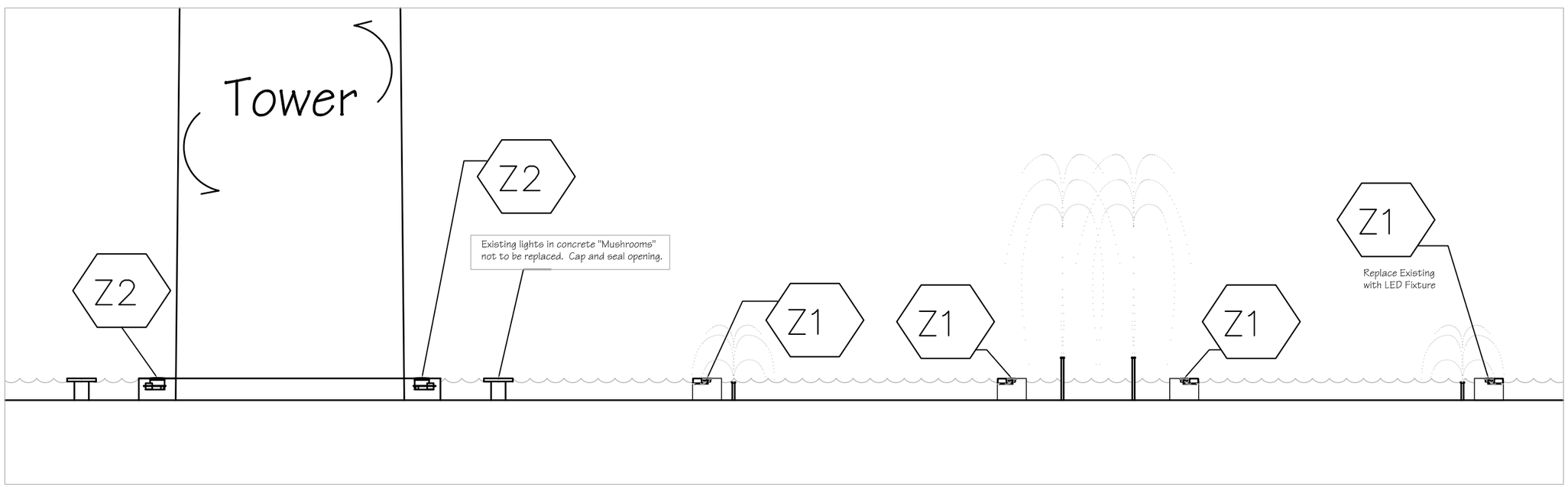

2 Fountain Section : Z1 and Z2 location

1/8" = 1'-0"

Date: 05/20/08

Scale: NTS

Sheet No. LD3.225-C

Fountain Section

Notes:

Podium

University at Albany

Lighting Masterplan

Albany, New York

Naomi Miller Lighting Design, LLC
46 23rd Street
Troy, NY 12180-1913 USA
518.272.2745 voice;
info@nmlightingdesign.com;
www.nmlightingdesign.com
Naomi Johnson Miller, FIES, FIALD, LC

4426 LED BM
Underwater
Fountain and Reflecting Pool
Fixtures

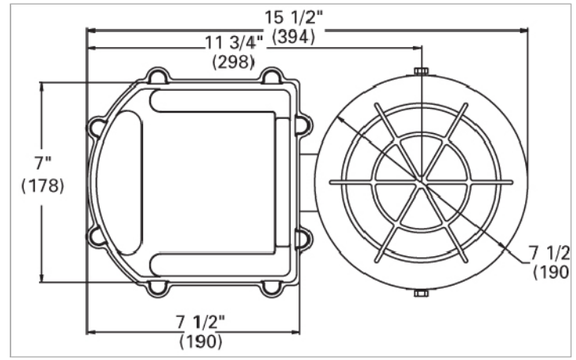

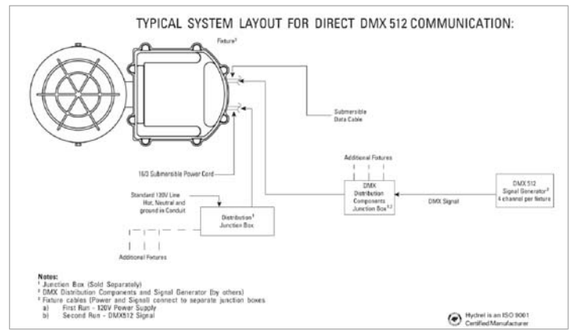

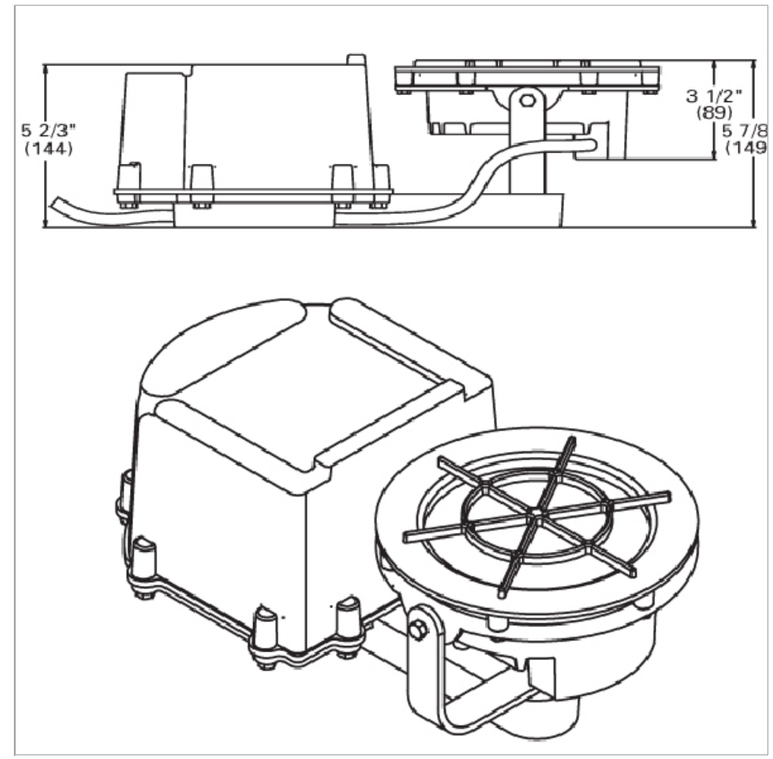

1 Fountain Lighting Detail

NTS

Fountain Lighting

Performance specification: For Fixture Type Z1

- Fountain uplights with base-mount bronze housing and stainless steel fasteners. Color changing LED technology with integral DMX controller. DMX Signal generator TBD. Minimum IP-68 rating. Nominal 16" long x 7.5" wide x 5.5" depth. Automatic temperature sensing if water level is low to protect LED life. Power and signal distributed to the fixture via flexible submersible cord that terminates into the wiring box. Specify length of cord in 5' increments. Minimum one-year warranty on fixture and LEDs, three-year warranty on power supply.

Approved products:

- Hydrel 4426BB-60LED-RGB-120V-MFL-FLC-BM-3DMX-DDX-CSL-required cord length. No known alternate

Lamps: LED (included)

Locating instructions

- Remove existing fountain lights and wiring
- Install new Z1 fixtures between water jets

Total Watts:

- Total watts used for fountain lighting = 16 fixtures x 40 W per fixture = 2400 W

Control:

- Astronominal time clock or DMX controller to switch lights on at dusk and off at designated hour. DMX controller can be programmed for color change.

Date: 04/24/08
Scale: NTS
Fountain Lighting
Notes:
Color changing LEDs
LD3.225-D
Sheet No.

University at Albany
Lighting Masterplan
Albany, New York

Naomi Miller Lighting Design, LLC
46 23rd Street
Troy, NY 12180-1913 USA
518.272.2745 voice;
info@nmlightingdesign.com;
www.nmlightingdesign.com
Naomi Johnson Miller, FIES, FIALD, LC

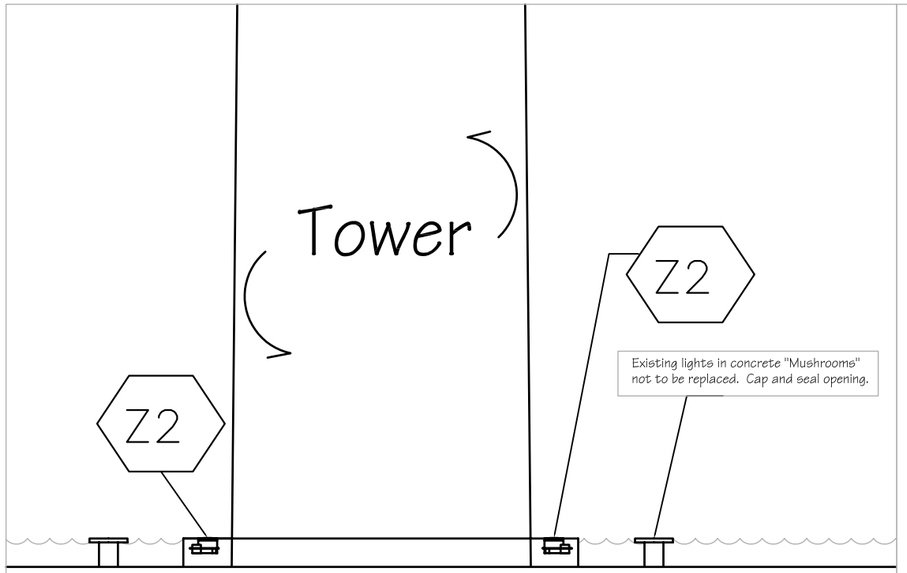

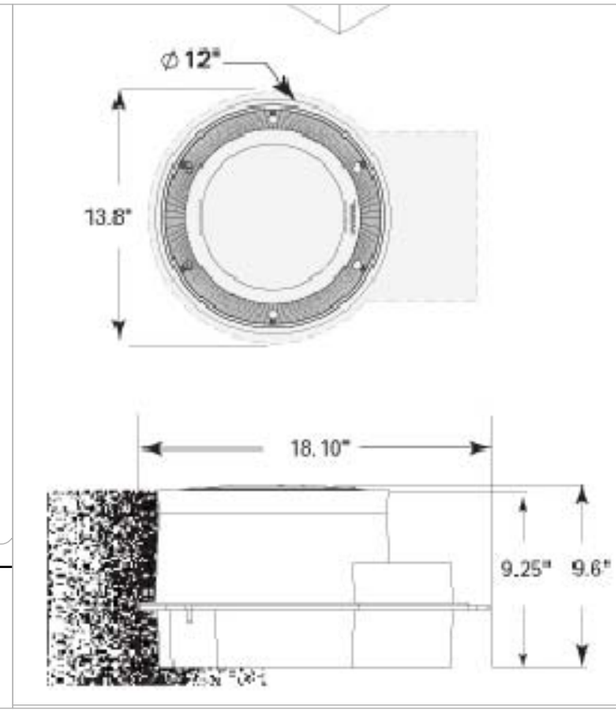

1 Z2 Tower Lighting details

1/16"=1'-0"

Tower Lighting

Performance specification: For Fixture Type Z2

- In-grade sealed uplight, mounted in existing concrete holes at base of pool tower. Bronze housing approx 14" diameter x 10" deep, with ballast chamber, IP67 rating, double lens to reduce heat of outer lens for safety, convex lens, internal source shield, narrow light distribution (less than 15 degrees to 50% candlepower). Integral electronic or magnetic ballast. Verify fixture will fit existing location before ordering fixture. G12 base socket.

Approved products:

- Hydrel 6700B-35CMT6-Volt-NSP-CLC-ISS or approved equivalent

Lamps: (1) CMH35/T6/830

Total Watts:

- Total watts used for tower ligthing = 16 fixtures x 40 W per fixture = 640 W.

Control:

- Astronominal time clock to switch on lights at dusk and off at designated hour.

Date: 04/24/08
Scale: NTS
Sheet No. LD3.225-E

Tower Lighting

Notes:

University at Albany
Lighting Masterplan
Albany, New York

Naomi Miller Lighting Design, LLC
46 23rd Street
Troy, NY 12180-1913 USA
518.272.2746 voice;
info@nmlightingdesign.com;
www.nmlightingdesign.com
Naomi Johnson Miller, FIES, FIALD, LC

3.2.2.6 COVERED ENTRY AREAS ON PODIUM (VESTIBULES)

3.2.2.6.1 Existing Conditions

The original recessed incandescent downlights are in place, but have been retrofitted with screwbase compact fluorescent lamps. These fixtures have glass Fresnel lenses that are regressed about 1.5” above the aperture. These downlights are spaced about 6’ apart in the entry vestibules.

3.2.2.6.2 Recommended Improvements

These downlight fixtures present the best opportunity for retrofitting with an innovative white LED product made by LLF (**Fixture Type D3**). It is a complete unit that fits into the existing fixture housing, and contains an array of LEDs behind a phosphored lens. The lens is regressed about 1.5” from the aperture, so it will look similar to the original lensed downlight. This LED product has extensive heat-sinking built into it, so it should last close to 50,000 hours before the LEDs have degraded to less than 70% of their original output. The unit draws only 12W, compared to 60W for the original incandescent lamp, or approximately 20W for the screwbase compact fluorescent lamp that is in place now. The light color is 3500K, so it matches the other linear fluorescent lamps used in the buildings. Each of these retrofit products costs about $75 when ordered in large quantities.

3.2.3 SPORTSFIELDS

3.2.3.1 EXISTING CONDITIONS

Because sports lighting is mounted on high poles and uses high wattage lamps, it can often be a source of glare, light trespass for neighbors, and skyglow. Conventional floodlighting products use 400 to 1500 W metal halide lamps and have poor optical control, so there is a great deal of light spill beyond the field itself. The Basketball Courts and Tennis Courts at the University are equipped with this type of equipment and their lighting fixtures should be reengineered and replaced. The Football field is equipped with better-aimed sportslighting, but the optical shielding is inadequate. The Field Hockey and Lacrosse fields are equipped with good-quality sportslighting products by Musco, and their optical control and shielding is far superior. The Soccer Intramural field, Softball field near State Quad, and the Baseball field are not lighted.

Good quality sportslighting doesn't spill light into neighbor's windows (Photo from www.Softlite.com website)

Glare from sportslighting can annoy neighbors as well as throw spill light into sky. (Photo from www.Musco.com website)

3.2.3.2 RECOMMENDATIONS FOR IMPROVED SPORTSFIELD LIGHTING

The Basketball and Tennis Courts and the Football field lighting should be replaced with one of two excellent lighting systems, one made by Musco Lighting ("Light Structure Green" series, but avoid their "SportsCluster2" series, see www.muscolighting.com) or one made by Softlite Lighting Systems (www.softlite.com). The manufacturers are both able to help with design, calculations, pricing, and procurement of the lighting systems.

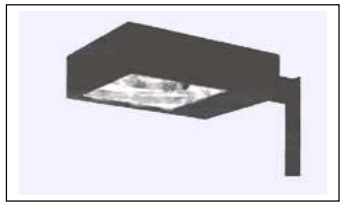

Softlite Sports Lighting (good)

Musco Sports Lighting (good)

3.2.4 EXTERIOR LIGHTING FOR PERIMETER BUILDINGS DESIGNED BY EDWARD DURELL STONE

3.2.4.1 EXISTING CONDITIONS

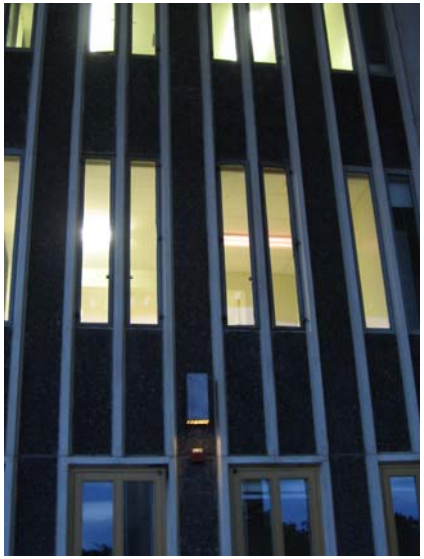

Figure 32 - Existing Box Light

Perimeter buildings such as Service Building A, Service Building C, the Health Center, and the residential quads have original exterior "box lights" equipped with one incandescent socket to direct light upward and another to direct light downward. The box is 8" wide x 18.5" tall x 5.25" deep, mounted on a bracket that is 1" deep. At present they are lamped with Par38 halogen lamps or self-ballasted retrofit compact fluorescent lamps. The uplight is wasted because these buildings do not have a canopy overhang that is as deep as the podium canopies, so less of the light is reflected downward and instead ends up contributing to skyglow.

There are also "wallpacks" mounted to these buildings where additional light has been requested. These often use orange high pressure sodium (HPS) lamps. The color and glare distracts from the campus character.

Figure 33 - Existing Wallpack

3.2.4.2 RECOMMENDATIONS FOR EXTERIOR LIGHTING - UPTOWN

All exterior lighting mounted to buildings without extensive canopy overhangs should direct light downward, and use a minimum of wattage to mark entrances and improve visibility and safety. The existing box lights should be changed out to a downward-only version of the Box Light, using energy-efficient light sources, as follows:

3.2.4.2.1 Box Lights (downward light only)

Fixture Type S2 *Performance specification for Downward-Only Box Light:*
Remove existing box lights and replace one-for-one with the product described below to match the appearance of the box lights mounted in the podium:

- Downward-only wall sconce to replace existing sconce. Heavy gauge aluminum square cylinder housing, 8-5/8" square x 20.25" tall, welded to a wall case that houses the wiring compartment. Wall case is 18-3/4" tall x 7" wide and hook-mounts to a wall support, fixed with bolts, with an EPDM gasket to seal the luminaire from dust and water infiltration. Overall projection shall not exceed 12-1/8". One high-frequency electronic ballast, approved manufacturers of Advance, Vossloh-Schwabe, and OsramSylvania, is mounted to the heavy-gauge galvanized steel wall support. University to supply manufacturer with paint color chip to match original paint finish of box lights, for use on all exposed housing materials.
- The lamp socket shall be mounted on sliding horizontal mounts, fastened down with wing nuts so that the lamp is aimed 20 degrees from vertical away from the mounting wall. The lamp sockets shall be centered 2" from the inside face of the cylinder, so that when aimed, none of the direct light of the lamp strikes the inside of the cylinder.
- Lens frame is formed from low copper aluminum (356 alloy) to minimize corrosion, and silicone gasket to seal out contaminants. Lamp access through two captive screws in frame. The lens in the bottom frame is a regressed "Solite" or

equivalent microprism tempered glass, minimum 6" diameter or square. No baffle required in bottom aperture. The top of the square cylinder is unapertured.
- The ballast is wired with quick disconnect plugs, pre-wired at the factory.
- The socket shall be a 4KV pulse-rated medium base for a 39W Par30 metal halide lamp.
- All exterior hardware, including captive screws, is made of stainless steel.
- UL listed for Wet Locations.
- Minimum one-year warranty on luminaire, 3 year warranty on ballast.
- Voltage as specified by University at Albany.

Approved product: SDL "SLF2520-Down-Solite-39Par30CMH-B-Voltage-Grey Painted Finish"
Lamps: (1) CMH39/Par30/FL25 lamps.

Approximate cost: $400 including lamp to the University at Albany when ordered in quantities of 50 or more.

3.2.4.2.2 Wallpacks or Wall-mounted Floodlights

Where "wallpacks" or "floodlights" have been installed to supplement light around perimeter buildings, they should be replaced with fixtures that are more responsive to issues of skyglow, light trespass, and glare. All replacement fixtures should use either 3000K ceramic metal halide lamps (up to 150W), or 3000K 32W compact fluorescent lamps, in fixtures with excellent optical control to limit uplight and glare. Because the eye perceives white light as brighter than white light at night, the existing HPS fixtures should be replaced with equal or lower wattages of metal halide or compact fluorescent lamps (even though the catalog listing of lumen output of the lamps is lower than for the HPS lamps.) Fixtures are painted gray to blend with concrete facades. Here are the specifications:

Replace a 150W HPS wallpack with **Fixture Type S11** in 150W warm color metal halide:
- Gardco 106-FT-150MH-Voltage-Gray (12" diameter quarter-sphere sconce)
- Or McGraw Edison ZDW-150PMH-Voltage-Gray
- Or Hubbell Lighting "Laredo" LMC-150P-Volt-3

Replace a 70-100W HPS wallpack with **Fixture Type S10** in 70W metal halide:
- Gardco 106-FT-70MH-Voltage-Gray (12" diameter quarter-sphere sconce)
- Or McGraw Edison ZDW-70PMH-Voltage-Gray
- Or Hubbell Lighting "Laredo" LMC-70P-Volt-3

Replace a 50W HPS wallpack with **Fixture Type S9** in 32W compact fluorescent:
- Gardco 106-FT-32CF-Voltage-Gray (12" diameter quarter-sphere sconce)
- Or McGraw Edison ZDW-32CF-Voltage-Gray
- Or Hubbell Lighting "Laredo" LMC-32F-Volt-3

3.2.5 Perimeter Support Buildings (Campus Police, Boor Sculpture Studio, and New Science Building)

3.2.5.1 Existing Conditions

The Campus Police Building has three large cylinder wall bracket fixtures on the front façade, and several HPS wallpack fixtures mounted toward the parking lot and rear areas.

Figure 34 - Public Safety Lighting

The Boor Sculpture Studio has a series of 250W (ED-18 bulb-shaped) metal halide floodlights mounted at grade, washing the exterior façade too brightly. The manufacturer is Gardco. (Some of these have been accidentally or intentionally re-aimed so that they aim away from the facades.)

Figure 35 - Boor Sculpture Studio floodlight

There is an excessive number of walkway poles along the roadway where a pedestrian path converges with the road on the north side of the building.
The New Science Building has a large number of decorative metal halide pole lights mounted in the lawn outside the building, and a number of metal halide floodlights aimed at exterior walls.

Figure 36 -New Science Building

3.2.5.2 Recommendations for Perimeter Support Buildings

Campus Police

Replace the HPS wallpacks with full cutoff, warm-color metal halide or compact fluorescent wallpacks as follows:

Replace a 150W HPS wallpack with **Fixture Type S11** in 150W warm color metal halide:

- Gardco 106-FT-150MH-Voltage-Gray (12" diameter quarter-sphere sconce)
- Or McGraw Edison ZDW-150PMH-Voltage-Gray
- Or Hubbell Lighting "Laredo" LMC-150P-Volt-3

Replace a 70-100W HPS wallpack with **Fixture Type S10** in 70W metal halide:

- Gardco 106-FT-70MH-Voltage-Gray (12" diameter quarter-sphere sconce)
- Or McGraw Edison ZDW-70PMH-Voltage-Gray
- Or Hubbell Lighting "Laredo" LMC-70P-Volt-3

Replace a 50W HPS wallpack with **Fixture Type S9** in 32W compact fluorescent:

- Gardco 106-FT-32CF-Voltage-Gray (12" diameter quarter-sphere sconce)
- Or McGraw Edison ZDW-32CF-Voltage-Gray
- Or Hubbell Lighting "Laredo" LMC-32F-Volt-3

Boor Sculpture Studio

Eliminate two pedestrian poles at the point at which the pedestrian pathway converges with the sidewalk along the roadway.

The installed building floodlights use excessively-high 250W metal halide lamps. Unfortunately, because of the lamp size and shape, the lamp wattage cannot be reduced unless the entire reflector assembly and ballast are replaced also. This is probably as costly as replacing the fixture with a lower-wattage floodlight. Because uplight contributes more to light pollution and glare than downward light, consider replacing the fixture with a fluorescent or metal halide fixture that washes downward onto the façade from the top of the building walls. Use no more than a 150 W ceramic metal halide lamp, or T8 linear fluorescent lamps.

New Science Building

Remove three excessive poles in the center of the lawn and save for replacements. (These are the poles that are located in the middle of the lawn. They do not follow the diagonal path.) Eliminate the floodlighting on the wall with the large square windows, if the floodlights are glaring to people inside the building after dark.

3.3 Downtown Campus Exterior Lighting

3.3.1 Existing Conditions

Architecturally, the Downtown Campus is a series of classical red-brick buildings with graceful curves arcades, remarkable stained glass, and proud symmetrical facades. Lighting could help support this appearance. Unfortunately the Western Avenue face of the Downtown Campus is lighted primarily by glaring high-pressure sodium floodlights supplied by National Grid and mounted to utility poles along the street. The light from these flattens the architectural detail, and its poor yellow color quality detracts from the appearance of the brick, stone, and plant materials. **These utility-provided floodlights should be disconnected and removed, and replaced with a more traditional-looking pole and fixture to illuminate walkways.**

Figure 37 - Floodlight on Utility Pole

In recent years, high pressure sodium wallpacks have been mounted on several exterior walls to supplement the light at entrance doors, below-grade entrances, and other areas that looked dark or unevenly lighted. These wallpacks are glaring for campus users and neighbors, and emit undesirable upward light.

Figure 38 - Downtown wallpack

A few short-pole "Shoebox" style fixtures have been added along walkways to entrances around the rear entrances of Draper and Hawley Halls. These are boxy and unhistorical in appearance and should be replaced with a better-looking pole-mounted product.

Figure 39 – Downtown Campus "Shoebox" Fixture Walkway Light

Parking lots on the Downtown Campus are lighted with utilitarian-looking cobrahead fixtures arm-mounted to utility poles. These are leased from National Grid. An additional parking lot across Western Avenue uses the same pole-mounted Widelite "Effex" EALM fixtures used on the Uptown Campus, using metal halide lamps. Although the color of light is appropriate, the lamp/ballast system is inefficient and produces uneven lighting on the paved surface of the parking lot.

Figure 41 – "Cobrahead" fixtures leased from National Grid to light Downtown parking lot

Figure 40 – Widelite "Effex" fixture in Thurlow parking lot

In the covered connectors between Draper Hall, Husted and Hawley Halls, hanging lanterns with a gothic style illuminate walkways. These use clear metal halide or mercury lamps. Seen through clear glass panels, they are glaring. They are similar in appearance to the wall-mounted carriage lanterns at the Washington Street entrance to Husted Hall, although these are lamped with High Pressure Sodium.

There are a few decorative exterior fixtures that are original to the campus buildings and should definitely be preserved. These include heavy-cast metal poles with round globes, and multiple-arm pole-mounted globe fixtures in front of Draper Hall and Page Hall, a spectacular pair of large carriage lanterns at the entrance to Hawley, Draper, and Husted Halls.

Figure 43 – Historic Gothic pendant in connector between Draper and Hawley and Husted Halls

Figure 44 – Historic post-top fixture on pedestal in front of Draper and Hawley Halls.

Figure 42 – Historic black iron carriage lantern wall sconces at entrances to Draper and Hawley Halls.

Figure 45 – Historic post-top fixture on pedestal in front of Page Hall.

Because the architectural character and style of the Downtown Campus varies from the Uptown Campus, the approach to exterior lighting is different. We recommend removing existing shoe-box style fixtures and adding post-top walkway fixtures using an early 20th Century-style fixture and pole, but with sophisticated optics that spread light efficiently while controlling glare and limiting uplight. Parking lot areas can be treated with the plainer poles and fixtures recommended for the Uptown Campus, as can the wall-mounted fixtures ("wallpacks").

3.3.2 Recommendations for Downtown Exterior Lighting

3.3.2.1 Downtown Exterior Walkways

3.3.2.1.1 Existing decorative historic fixtures

Fixture Type P6 *- Glass-globe decorative pole fixtures*
These should be removed by a lighting restoration specialist, repaired and restored, and lamped with a 20W 3000K (warm color) screwbase compact fluorescent lamps. The glass can be remounted, or if vandalism is a concern, replaced with a "DR Acrylic" globe. Polycarbonate globes are NOT recommended, because although they are tougher when new, they degrade quickly from daylight, and within a couple years will be yellowed and brittle. DR Acrylic or even heavy white glass are more durable in the long run.

Figure 46 - Glass-globe decorative pole fixtures

Fixture Type P6 *- Large decorative pedestal-mounted pole fixtures at entrances to Hawley, Husted, and Draper Halls*

These should be removed by a lighting restoration specialist, repaired and restored, and relamped with decorative amber LED replacements that will flicker like a gas flame. These fit a medium screwbase socket, and although the fixtures will not emit significant light, they will become very attractive reminders of the early days of the campus buildings.

Figure 47- Large decorative lanterns at Hawley and Husted Hall entrances (S12)

Fixture Types Q8 and S13*- Decorative gothic pendants and wall sconces, located in covered walkways or mounted on adjacent buildings*
The existing pendants (Q8) should be removed by a lighting restoration specialist, repaired and refinished, and lamped with a 20W 3000K (warm color) screwbase compact fluorescent lamps. The glass panels will be replaced with frosted clear glass to obscure the view of the compact fluorescent lamp.

Similarly, the existing gothic-style sconces (S13) should be removed by a lighting restoration specialist, repaired and refinished, and lamped with a 20W 3000K (warm color) screwbase compact fluorescent lamps. The glass panels will be replaced with frosted clear glass to obscure the view of the compact fluorescent lamp.

Figure 48 – Decorative gothic pendant. S13 wall sconce similar.

3.3.2.1.2 Walkway pole-mounted lighting

Add walkway post-top fixtures in a style appropriate to the early 20th Century style of the campus buildings. The recommended fixture and pole is one that appears to use a traditional acorn-shaped glass and decorative cap, although it contains a unique optical system that directs almost 99% of its emitted light downward with very little glare. (Contrast that with most acorn-type fixtures that emit 20-50% of their light upward.) The fixture is mounted to an 11' fluted aluminum pole on a decorative flared base that features a generous handhole. No transformer base is needed. (An aluminum pole is recommended for this application rather than a fiberglass pole because the fluting is important for the appearance of the completed unit. Aluminum will provide a superior appearance and durability, and are expected to sustain less damage because the Downtown Campus walkways receive no vehicular traffic.)

Although the fixture is available with a polycarbonate globe, the glass globe is more durable in the long run, and is superior at controlling upward light. This **Fixture Type P5** should be spaced 60' on center along walkways.

Fixture Type P5 Performance Specification

- Traditional "acorn" appearance fixture with cast aluminum housing, and heavy glass refractor. Toolfree access to lamp and ballast. HPF pulse-start magnetic ballast with ignitor, with quick-disconnect plugs.
- IP66 ingress protection on optical system to keep dirt and water vapor out.
- Minimum fixture efficiency of 69%.
- Less than 1% of lamp lumens emitted above 90° from nadir for "IESNA Cutoff" designation. IESNA Type III distribution. Hydroformed reflector and sealed glass prismatic globe. Exterior of globe is smooth to reduce dirt accumulation.
- 11' fluted aluminum pole (low-copper aluminum to reduce corrosion) and decorative fluted base with large handhole. Textured black paint finish, or as selected by owner.

Approved product: Lumec S55C1-GL-70MH-DSX3-Volt-SFX-CRA-1-BK-TX (fixture) And Lumec R80-TBC1-BK-TX (pole)

Figure 49 – Proposed Downtown Campus Walkway Lighting Fixture and Pole.

Figure 50 - Proposed Downtown Campus walkway fixture and pole superimposed on campus photo.

3.3.2.2 FAÇADE LIGHTING/AESTHETIC LIGHTING

The Downtown Campus deserves a greater neighborhood and architectural presence than it enjoys at present. In future years, strategically-placed lighting could accentuate the columns at the entrances of Page Hall, Draper Hall, Hawley Hall, and Husted Hall. Rather than "floodlighting" which washes and flattens the façade, consider mounting lights between the columns and the brick walls behind them. This would articulate the façade and bring out the architectural depth and texture with minimal power use. It will be important to use efficient light sources that bring out the warmth of the brick. This warrants future study.

3.3.2.3 WALLPACKS AND OTHER MISCELLANEOUS BUILDING LIGHTING

Where "wallpacks" or "floodlights" have been installed to supplement light around Downtown Campus buildings, they should be replaced with fixtures that are more responsive to issues of skyglow, light trespass, and glare. All replacement fixtures should use either 3000K ceramic metal halide lamps (up to 150W), or 3000K 32W compact fluorescent lamps, in fixtures with excellent optical control to limit uplight and glare. The warm-color, wider-spectrum of the light are more flattering to the brick and plant materials. Because the eye perceives white light as brighter than white light at night, the existing HPS fixtures should be replaced with equal or lower wattages of metal halide or compact fluorescent lamps (even though the catalog listing of lumen output of the lamps

is lower than for the HPS lamps.) Fixtures are painted bronze to coordinate with other metal trim used around brick facades. Here are the specifications:

- Replace 150W and higher wattage HPS fixtures for area lighting with 150W warm-color metal halide fixture **Fixture Type S16** as follows:
    - Gardco 106-FT-150MH-Voltage-Bronze (12" diameter quarter-sphere sconce)
    - Or McGraw Edison ZDW-150PMH-Voltage-Bronze, or
    - Hubbell "Laredo" LMC-150P-Volt-Bronze
- Replace 100W and lower wattage HPS fixtures for medium area lighting with 70W warm-color metal halide **Fixture Type S15** as follows:
    - Gardco 106-FT-70MH-Voltage-Bronze (12" diameter quarter-sphere sconce)
    - Or McGraw Edison ZDW-70PMH-Voltage-Bronze, or
    - Hubbell "Laredo" LMC-70P-Volt-Bronze
- Replace 50W and lower-wattage HPS fixtures or new fixtures for lighting doorways and similar lower-height, smaller area applications with **Fixture Type S14** in compact fluorescent as follows:
    - Gardco 106-FT-32CF-Voltage-Bronze (12" diameter quarter-sphere sconce)
    - Or McGraw Edison ZDW-32CF-Voltage-Bronze, or
    - Hubbell "Laredo" LMC-32F-Volt-Bronze

3.3.2.4 Stained Glass Windows – Nighttime Visibility

Dewey Library in Hawley Hall is an architecturally stunning space with beautiful original stained glass windows. Daylight makes these windows visible from the interior during the day, but is there a way to make them visible at night from the exterior?

To make a stained glass window "glow" requires a large, diffuse, bright surface behind the window, perpendicular to the observer's angle of view. During the day this surface is the sky. At night, an observer on the street would be looking upward at the windows, so the surface behind the window would be the ceiling and upper walls of the library. These surfaces need to be

- very light in color
- brightly lighted, and
- evenly lighted

in order to make the windows look their best. This can be done with electric lighting. See the section on recommendations for interior lighting of Dewey Library.

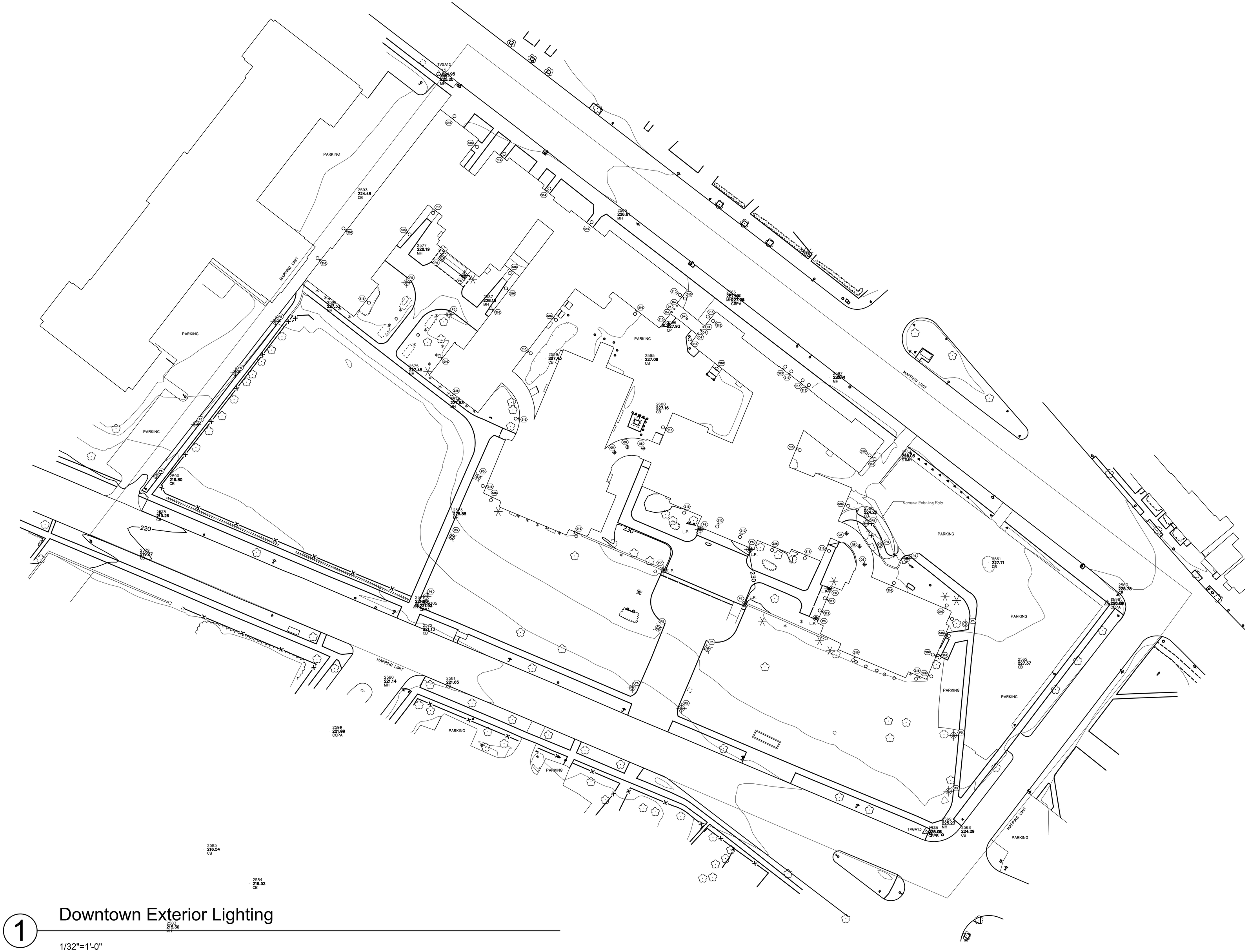

1 Downtown Exterior Lighting

1/32"=1'-0"

Date: 04/24/2008

Scale: 1/32" = 1'-0"

Sheet No. LD3.320

Lighting Plan

Notes:
Downtown Exterior Lighting

University at Albany
Albany
NY

Naomi Miller Lighting Design, LLC
46 23rd Street
Troy, NY 12180-1913 USA
518.272.2745 voice
info@nmillerlightingdesign.com
www.nmillerlightingdesign.com
Naomi Johnson Miller, FIES, FIALD, LC

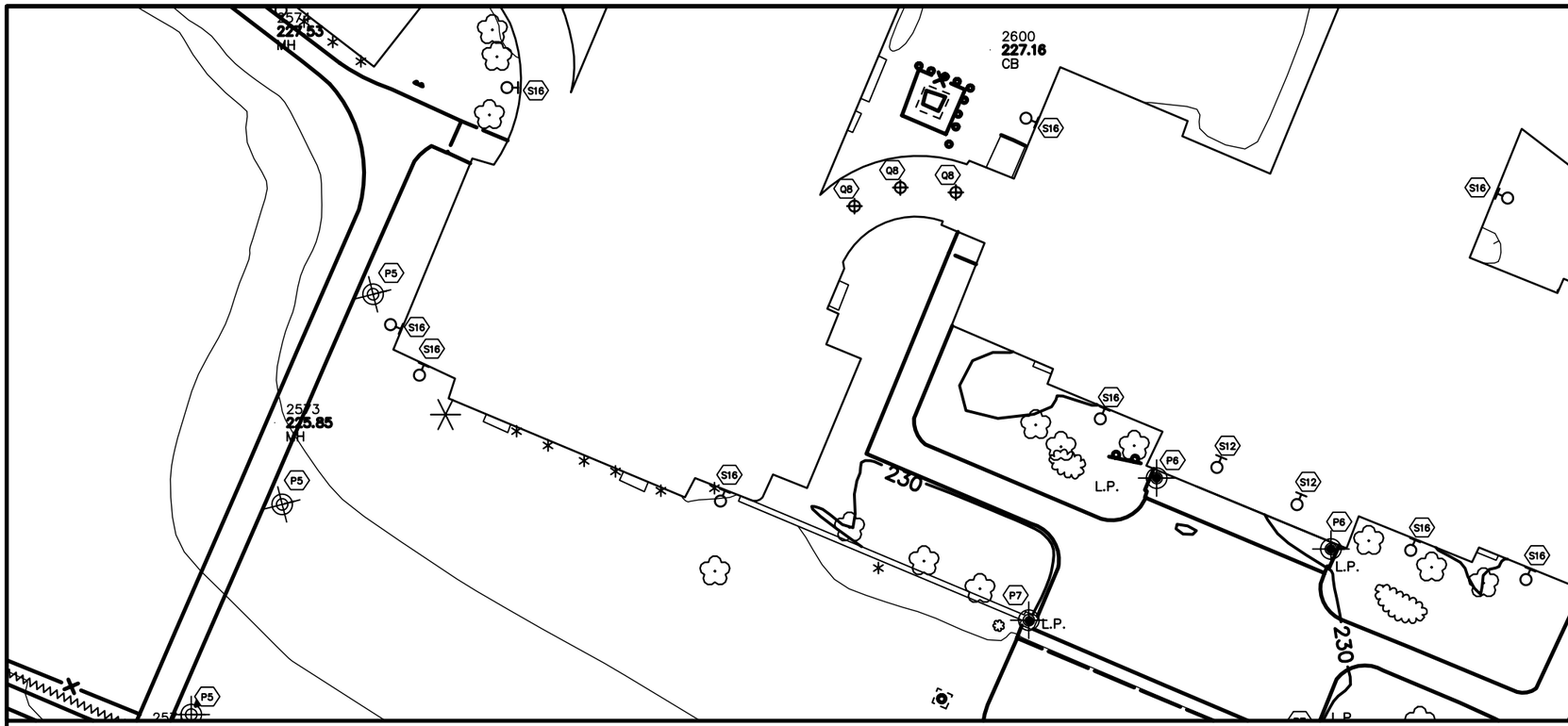

Fixture Type P5 : Pedestrian area
Decorative post top fixture for pedestrian areas, approx. 16' tall
Single post-top fixture mounted on 14' pole on transformer base, IES Type III distribution. Less than 1% lamp lumens emitted above 90 degree.
Lumec S55C1-150CMH-GL-DSX3-Volt-Finish
Pole: Lumec R80A-12.5-TBC1-GN8TX

with GE CMH150/U/830/MED/0 lamp.

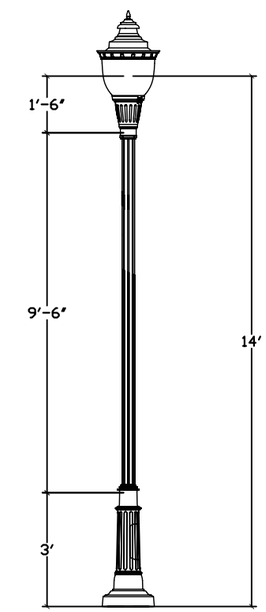

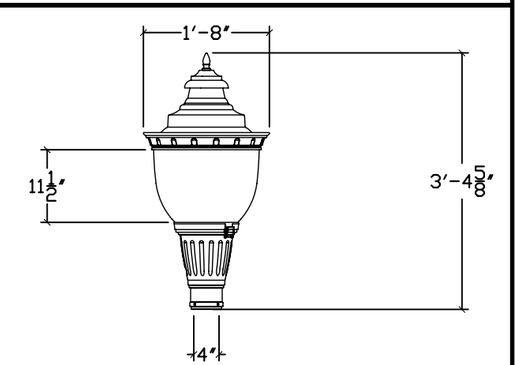

Date: 05/20/08
Scale: Varies
Sheet No. LD3.321

Downtown Campus
Notes:
Interior Roadway

University at Albany
Lighting Masterplan
Albany, New York

Naomi Miller Lighting Design,LLC
46 23rd Street
Troy, NY 12180-1913 USA
518.272.2745 voice
info@nmlightingdesign.com;
www.nmlightingdesign.com
Naomi Johnson Miller, FIES, FIALD, LC

3.4 EXTERIOR LIGHTING – ALUMNI QUAD

3.4.1 EXISTING CONDITIONS

The Alumni Quad is a series of Residence halls located on Western Avenue. Like the Downtown Campus, the buildings have a traditional appearance, red brick with classical white woodwork details at entries. This residence campus needs to have a visual connection with the Downtown Campus, and security is a prime issue.

The campus has a series of post-top fixtures with yellow high pressure sodium lamps. Additional lighting at the building entrances is provided with wallpacks. It tends to be glaring, and unflattering to the building facades.

Figure 51 - Existing Alumni Quad Wallpack

Figure 52 – Alumni Quad Walkway/Driveway – Existing Pole Lighting

3.4.2 RECOMMENDATIONS

3.4.2.1 WALKWAYS

Because the architectural style of the Alumni Quad is similar to that of the Downtown Campus, it makes sense to remove the existing poles and replace them with the same traditional-appearance decorative fixtures and poles recommended for Downtown. **(Fixture Type P5).** These poles use warm-color pulse-start metal halide lamps in 70W. They will help the area look safer as well as flattering the buildings and plant materials. The poles should be spaced 50-60' on center.

3.4.2.2 WALLPACKS

Replace existing wallpack fixtures with warm-color metal halide full-cutoff fixtures, as specified for the Downtown Campus. See **Fixture Type S14, S15, and S16** specifications.

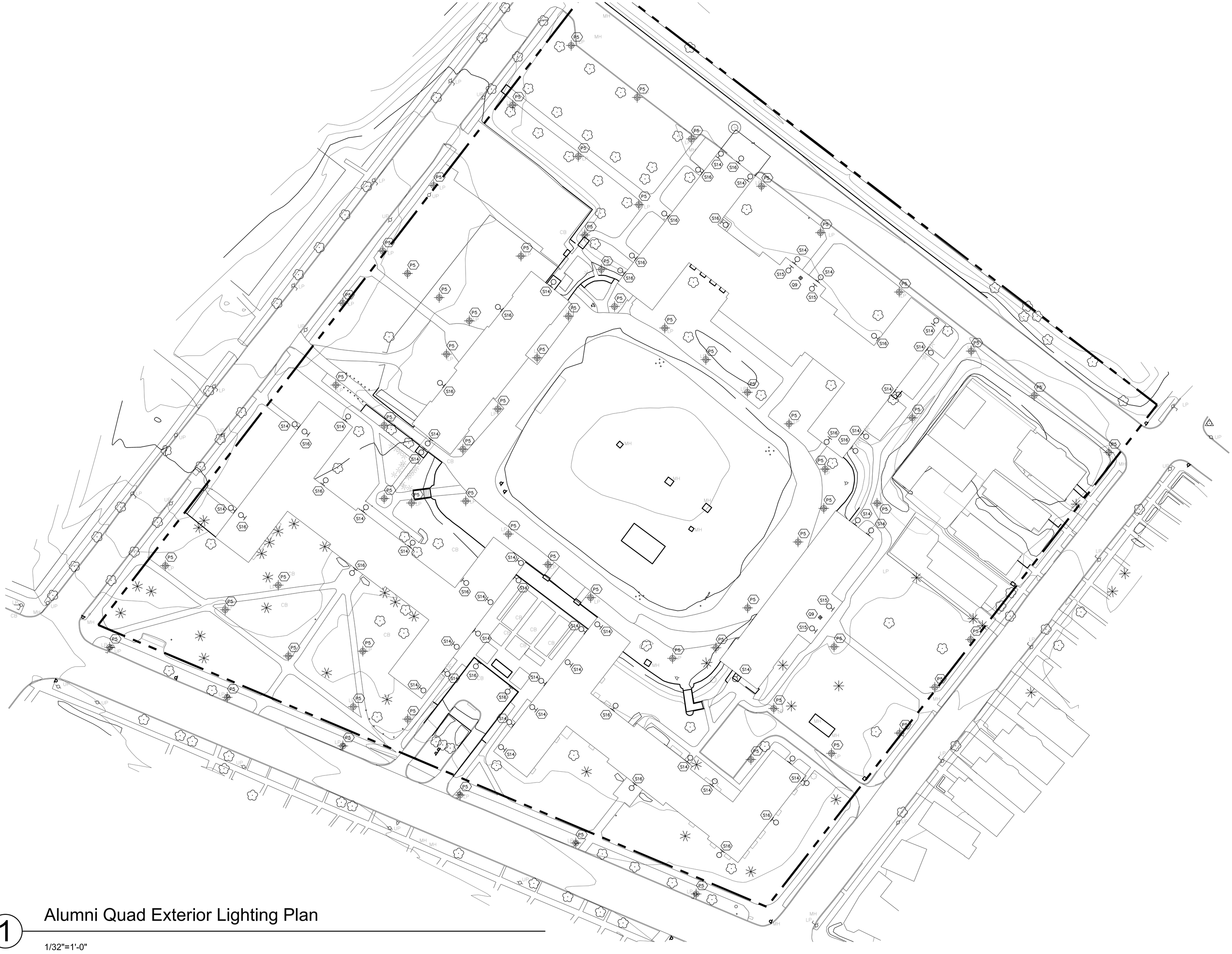

1 Alumni Quad Exterior Lighting Plan

1/32"=1'-0"

Date: 04/24/2008

Scale: 1/32" = 1'-0"

LD3.420

Sheet No.

Lighting Plan

Notes:
Alumni Exterior Lighting

University at Albany
Albany
NY

Naomi Miller Lighting Design, LLC
46 23rd Street
Troy, NY 12180-1913 USA
518.272.2745 voice
info@nmlightingdesign.com;
www.nmlightingdesign.com;
Naomi Johnson Miller, FIES, FIALD, LC

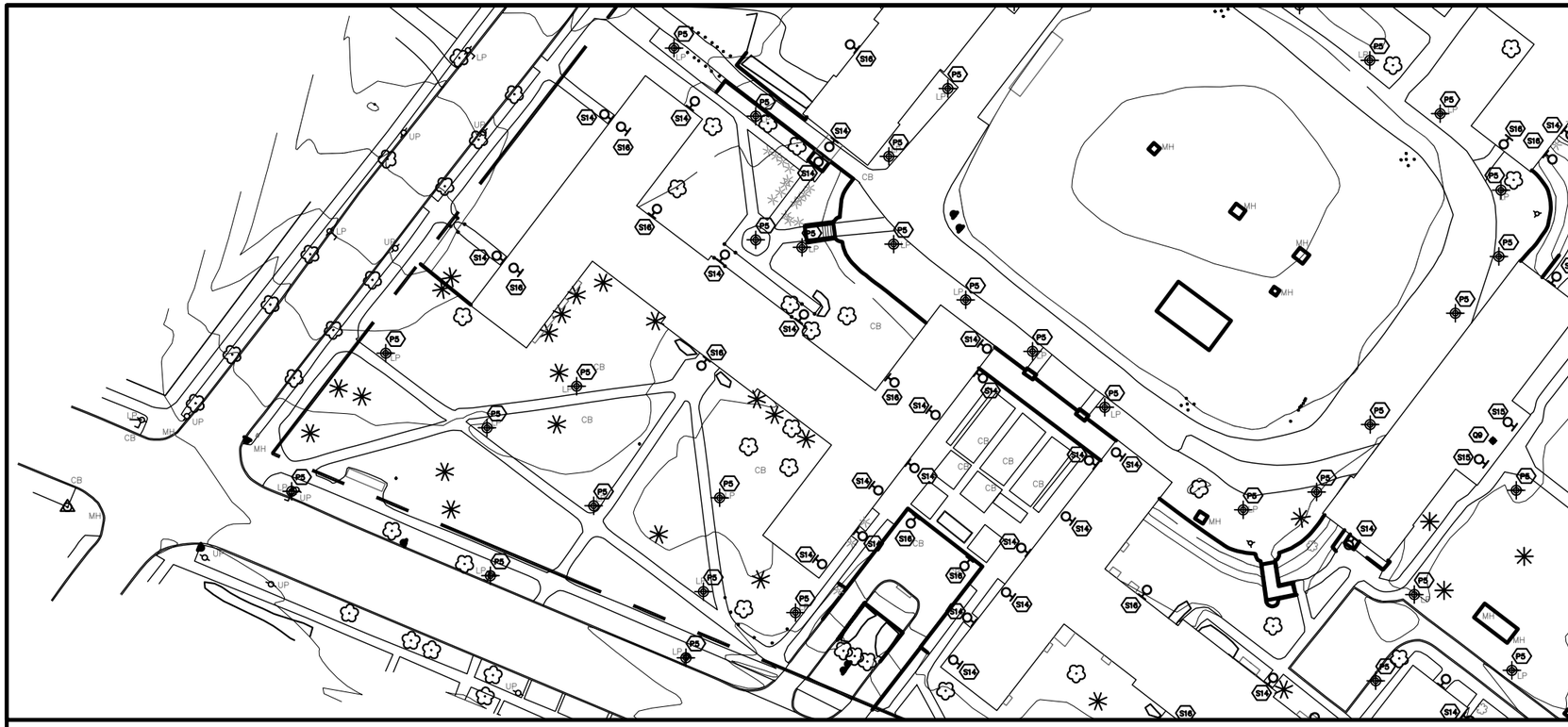

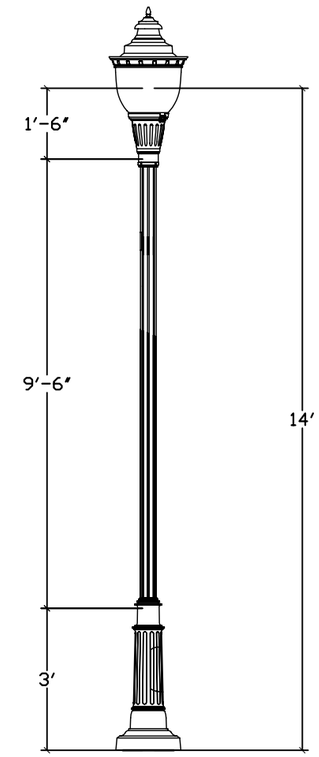

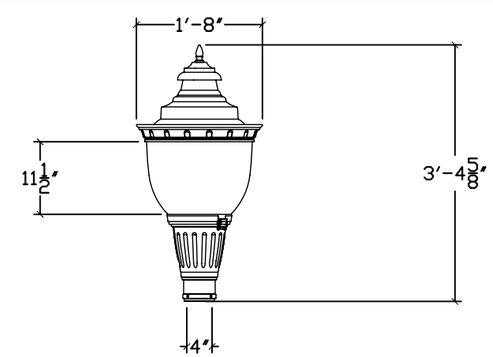

Fixture Type P5 : Alumni Quad
Decorative post top fixture for pedestrian areas, approx. 16' tall
Single post-top fixture mounted on 14' pole on transformer base, IES Type III distribution
Lumec S55C1-150CMH-GL-DSX3-Volt-Finish
Pole: Lumec R80A-12.5-TBC1-GN8TX

with GE CMH150/U/830/MED/0 lamp.

Date: 03/01/08
Scale: Varies
Sheet No. LD3.421

Alumni Quad
Notes:
Pathway Lighting

University at Albany
Lighting Masterplan
Albany, New York

Naomi Miller Lighting Design,LLC
46 23rd Street
Troy, NY 12180-1913 USA
518.272.2745 voice
info@nmlightingdesign.com;
www.nmlightingdesign.com
Naomi Johnson Miller, FIES, FIALD, LC

4 INDOOR LIGHTING MASTERPLAN

4.1 INDOOR LIGHTING FOR THE UPTOWN CAMPUS

4.1.1 HISTORIC FIXTURES

4.1.1.1 STANDARD SAUCER LIGHT (FIXTURE TYPE Q1)

The "saucer lights" are a signature fixture for the campus and need to be preserved. The small saucers are approximately 8' in diameter, with uplight from the top, and concentrated light downward from the removable "snowflake" grille in the center, and direct light through the twelve 2-1/2" diameter holes around the perimeter of the aluminum spinning.

These fixtures should be removed and refurbished by a qualified historic fixture restoration company. Older lighting technology in the saucer will be replaced with current technologies, reducing energy use dramatically while maintaining the original light output. The original power draw of the saucers was approximately 1014W. In recent years these had been retrofitted with screwbase compact fluorescent lamps in the medium-base sockets and 3' T8 fluorescent linear lamps in the uplight, and the fixtures dropped in power use to approximately 530W. The recommended refurbishing will drop the power use to approximately 519W. See specification for Fixture Type Q1 and detail drawing.

Figure 53 - Standard saucer light used in Campus Center Dining

4.1.1.2 LARGE SAUCER (FIXTURE TYPE Q3)

The large saucer is similar to the standard saucer light, but 9' in diameter. This saucer, located in the Campus Center Lobby, at the top of the Campus Center Dining Center staircase, and potentially elsewhere on campus, is too large to be removed from the buildings. The refurbishment of these saucers will be similar to that of Q1, but will have to be performed in situ by the restoration company. This will limit the final quality of the work, but the final appearance and performance will still be upgraded from existing conditions.

Figure 54 - Large saucer light as seen in Campus Center Dining

4.1.1.3 PALM LIGHTS

The Library and Performing Arts Center have a unique lighting detail built into the arching columns, which is affectionately called "palm lights" because the lighted linear slots fan out from the column like palm fronds. These fixtures were reworked in the 1990s with T8 fluorescent lamps, electronic ballasts, and prismatic lenses, in order to improve their energy efficiency. The work that was done is very effective and does not detract from the appearance of the fixtures. It is recommended that this retrofit be retained, maintained and repaired when necessary.

Figure 55 - Palm Lights in Library

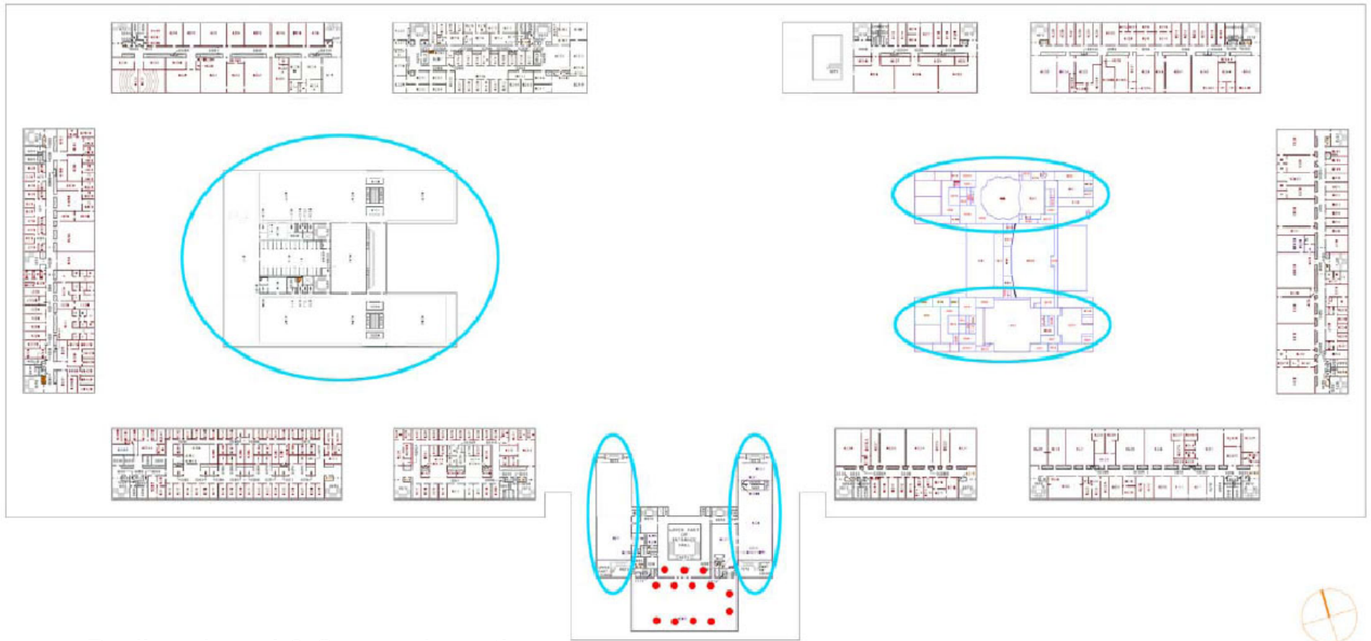

1 Podium Level 2 Saucer Locations

NTS

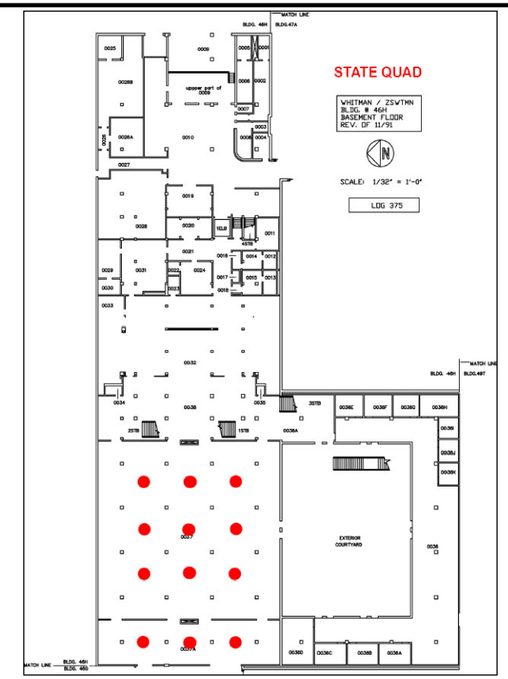

2 State Quad Dining Saucer Locations

NTS

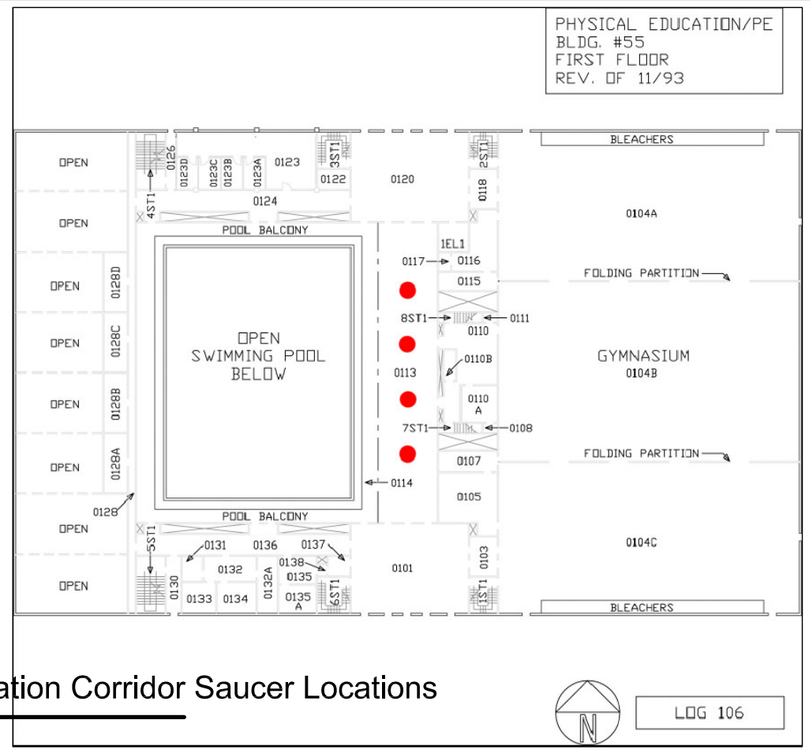

3 Physical Education Corridor Saucer Locations

NTS

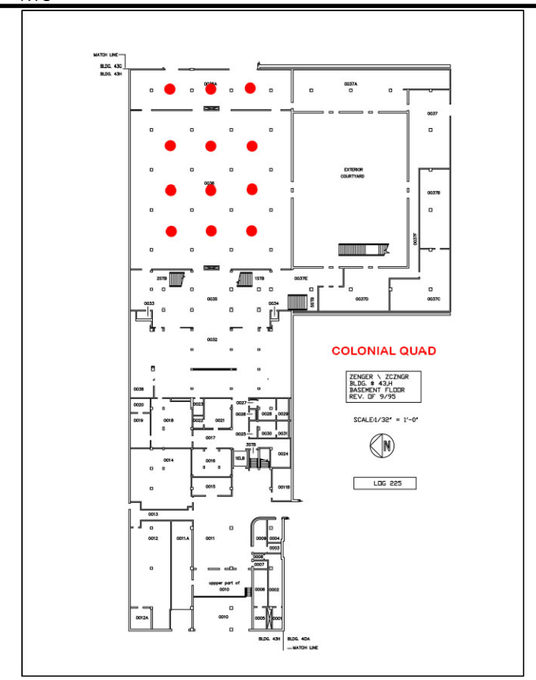

4 Colonial Quad Dining Saucer Locations

NTS

Date: 05/20/08

Scale: NTS

LD4.111-A

Sheet No.

Saucer Locations

Notes:

University at Albany

Lighting Masterplan
Albany, New York

Naomi Miller Lighting Design,LLC
46 23rd Street
Troy, NY 12180-1913 USA
518.272.2745 voice
info@nmlightingdesign.com
www.nmlightingdesign.com
Naomi Johnson Miller, FIES, FIALD, LC

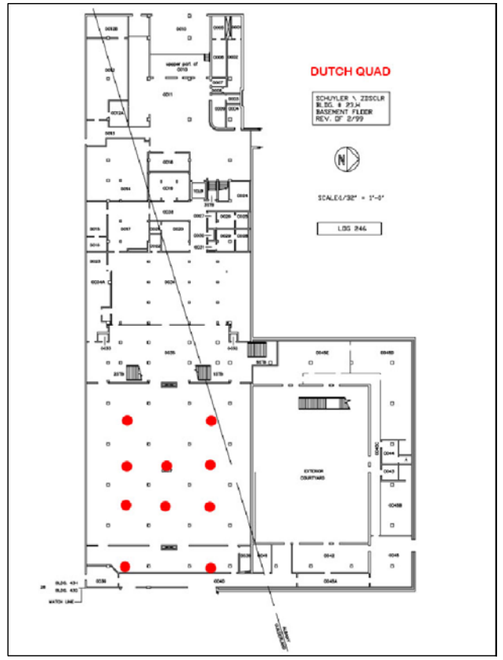

1 Dutch Quad Saucer Locations

NTS

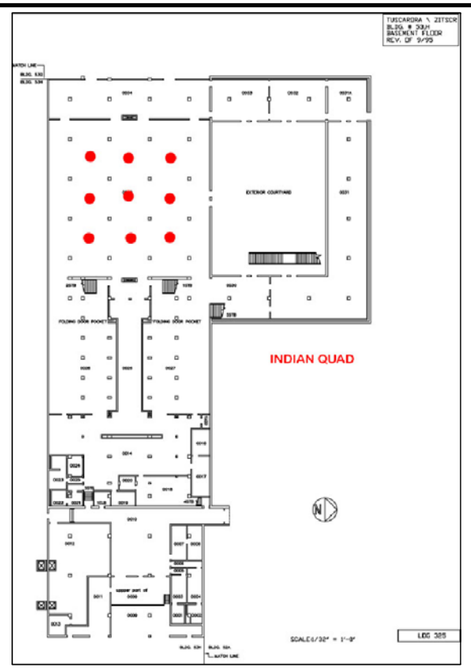

2 Indian Quad Saucer Locations

NTS

Date: 05/20/08

Scale: NTS

Sheet No. LD4.111-B

Saucer Locations

Notes:

University at Albany

Lighting Masterplan

Albany, New York

Naomi Miller Lighting Design,LLC
46 23rd Street
Troy, NY 12180-1913 USA
518.272.2745 voice
info@nmlightingdesign.com;
www.nmlightingdesign.com
Naomi Johnson Miller, FIES, FIALD, LC

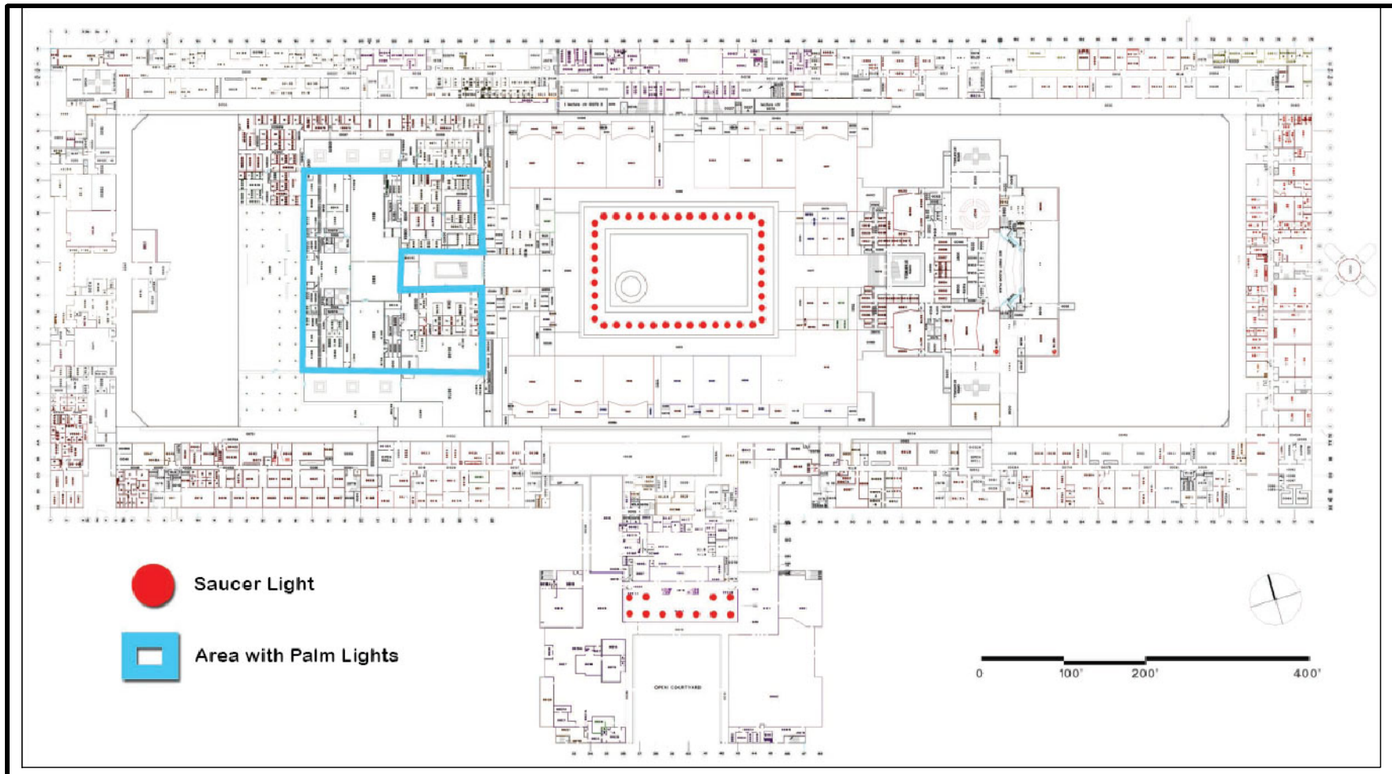

1 Podium Lower Level Saucer Locations

NTS

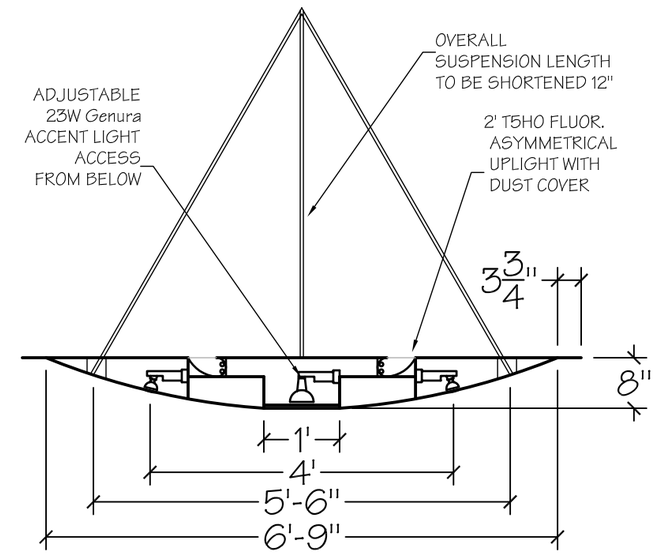

2 Interior Small Saucer Section

1/2"=1'-0"

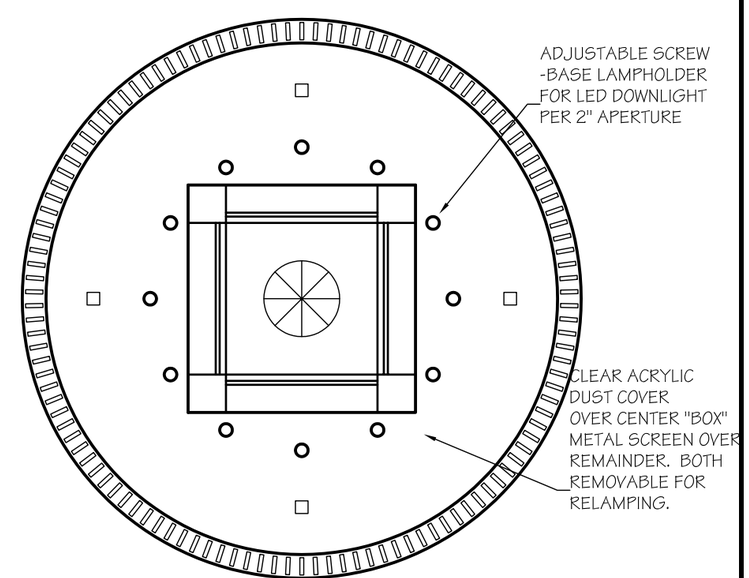

3 Interior Small Saucer Plan

1/2"=1'-0"

Fixture Type Q1 : Interior Small Saucers
Performance specification:
Existing "saucer light", to be removed and renovated at factory. Saucer is approximately 7'-8" in diameter, made of spun aluminum, with twelve 2" diameter glass apertures for downlight, and one central cavity for downlight accessible from removable grille. Manufacturer to renovate one saucer, removing existing wiring and internal fixtures. Replace with three circuits of lighting: four 2-lamp asymmetrical 2' long T5 fluorescent uplights, one 23W screwbase "Genura" R25 lamp in center downlight section accessible by star-pattern grille, and (12) 23W screw-base "Genura" R25 lamps held in ring above glass lens, aimed through existing glass apertures. Manufacturer shall remove all metal dents and ripples, repair damaged parts, and reconfigure internal lighting products. Manufacturer shall repaint saucer to match original paint finish. Saucer is currently suspended from four mounting points. Overall suspension length to be reduced 12" so that saucer hangs 12" higher above floor. Manufacturer shall investigate covering top of saucer so that it is easier to clean fixture when necessary, and so that the fixture does not collect debris. Lamps must still be easily maintained.

Approved manufacturer: Klemm Reflector. Contact Mike O'Hearn at Total Lighting Concepts (518) 453.9445 for information.
Lamps:
(8) F24T5HO/835 lamps
(13) EL23/R25/WW "Genura" lamps by GE

Date: 05/20/08
Scale: Varies
Sheet No. LD4.111-C

Interior Small Saucers
Notes:

University at Albany
Lighting Masterplan
Albany, New York

Naomi Miller Lighting Design,LLC
46 23rd Street
Troy, NY 12180-1913 USA
518.272.2745 voice
info@nmlightingdesign.com;
www.nmlightingdesign.com
Naomi Johnson Miller, FIES, FIALD, LC

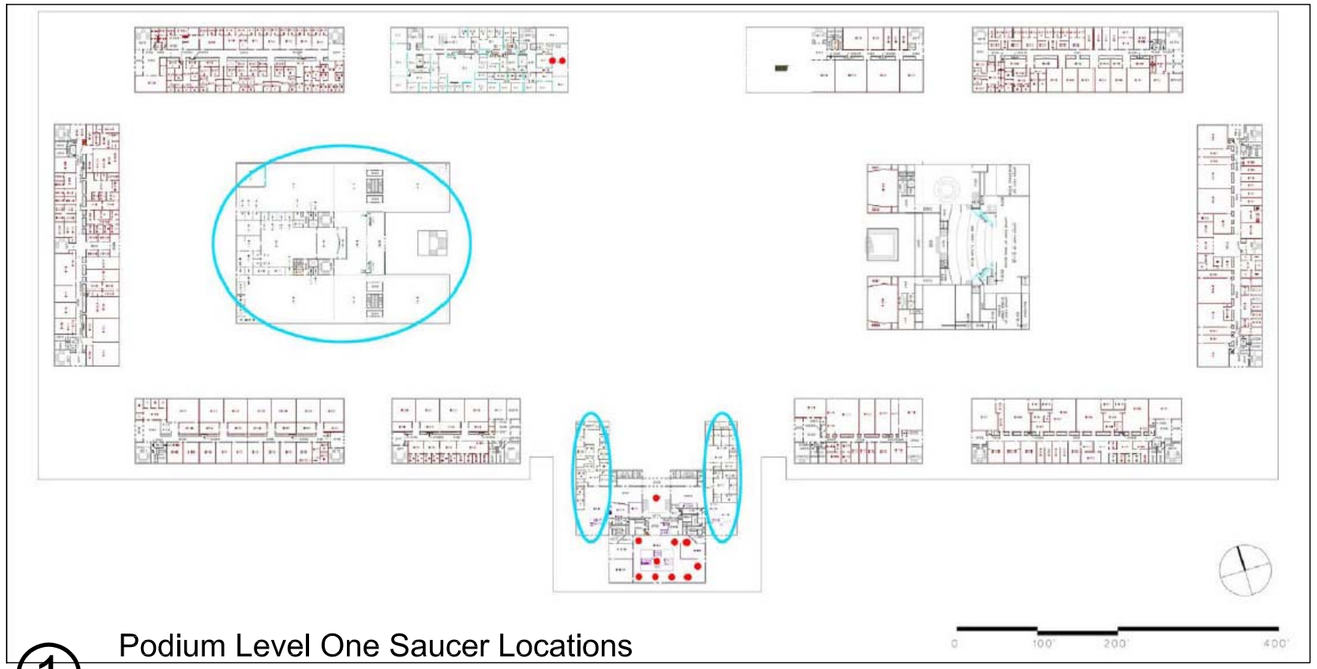

1 Podium Level One Saucer Locations

NTS

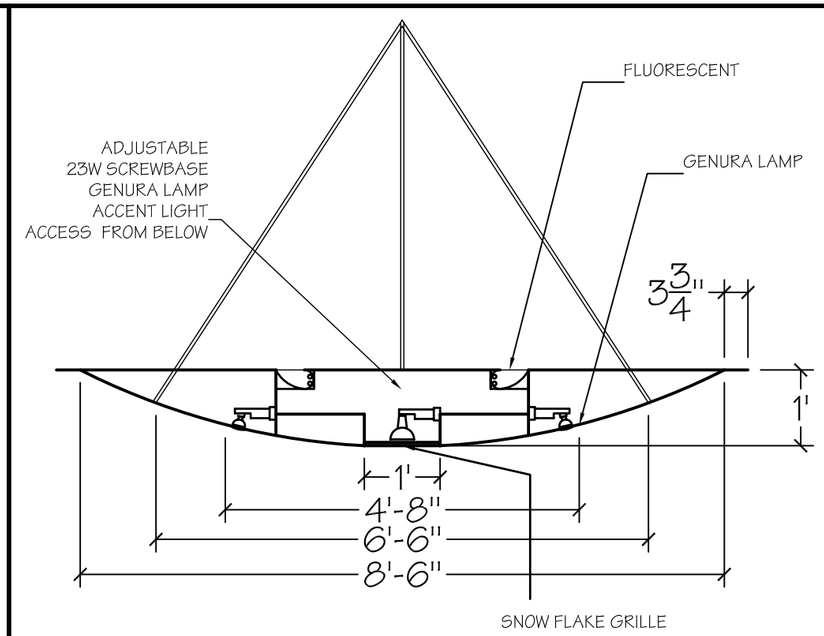

2 Interior Large Saucer Section

1/2"=1'-0"

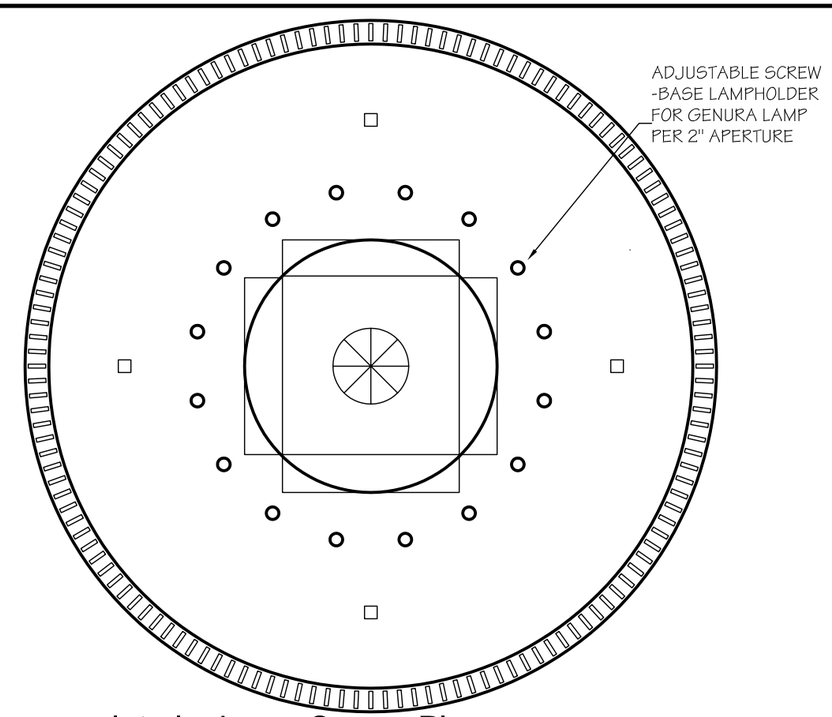

3 Interior Large Saucer Plan

1/2"=1'-0"

Q3 Interior Large Saucers
Performance specification:
Existing "saucer light", to be removed from ceiling *and renovated in place* because fixture is too large to be removed from the building. Saucer is approximately 9' in diameter, made of spun aluminum, with sixteen 2" diameter glass apertures for downlight, and one central cavity for downlight accessible from removable grille. Manufacturer to remove existing wiring and internal fixtures. Replace with two circuits of lighting: four 2-lamp asymmetrical 2' long T5 fluorescent uplights, one 23W reflector "Genura" reflector lamp in center downlight section accessible by star-pattern grille, and (16) 23W reflector "Genura" reflector lamps held in ring above glass lens, aimed through existing glass apertures. Manufacturer shall remove all metal dents and ripples, repair damaged parts, and reconfigure internal lighting products (recognizing that the results will not be perfect since the saucer cannot be shipped to the factory). Manufacturer shall repaint saucer to match original paint finish. Saucer is currently suspended from four mounting points.

Approved manufacturer: Klemm Reflector. Contact Mike O'Hearn at Total Lighting Concepts (518) 453.9445 for information.
Lamps:

Date: 05/20/08
Scale: Varies
LD4.112
Sheet No.

Interior Large Saucers
Notes:

University at Albany
Lighting Masterplan
Albany, New York

Naomi Miller Lighting Design, LLC
46 23rd Street
Troy, NY 12180-1913 USA
518.272.2745 voice
info@nmlightingdesign.com;
www.nmlightingdesign.com

4.1.2 Specific Uptown Campus Space Types

4.1.2.1 Uptown Classrooms

4.1.2.1.1 Existing Conditions

Typical classrooms have barrel-vaulted concrete ceilings, with the barrels spaced 5' on center. The original design for these classrooms used a 6" x 6" square fixture with a single High-Output T12 (1.5" diameter) fluorescent lamp in cross-section. The fixture was open upward, with a white plastic egg-crate louver on the downward side for glare control. These ran almost continuously along the length of the barrel vault, producing a very uniform and comfortable light for students and instructor, and reasonable lighting for the chalkboards.

The power use for this lighting system was very high. At 2.0 W/sf it is 50% higher than the power maximum allowed in today's energy codes for classrooms. Also, today's professors often use data projectors for many teaching presentations, and the indirect lighting component can wash out the visibility of the projection screen.

The campus has replaced some of the original linear fixtures with a direct/indirect 3-lamp T8 fluorescent fixture made by Cooper Corelite. These are an economical fixtures with excellent optics, but if installed as a one-for-one replacement of the original fixtures, actually increases the light levels and power use to 2.4 W/sf. Although the fixture uses energy-efficient lamps and ballasts, it delivers over 50 footcandles on the desktop, more than IESNA standards recommend.

Figure 57 - Classroom with original linear fluorescent lighting

Figure 58 - Classroom with newer Cooper Corelite lighting fixtures

4.1.2.1.2 Classroom Lighting Recommendations

Here are the goals for replacement lighting:

- Meet or exceed IESNA illuminance recommendations on desktop and whiteboard
- Minimize brightness of the fixture so that it doesn't reflect in computer screens
- Have the capability of reducing light levels and ceiling and wall brightness to enable easy viewing of projector presentations, or reduce electric lighting when daylighting contribution is significant
- Keep the quantity of fixtures as low as possible to keep cost and maintenance down
- Reduce energy use by lowering the connected lighting load (as measured through W/sf) and by using occupancy sensors to automatically shut off classroom lighting when the room is not in use.

Refurbishment of the existing original light fixtures was considered, but the cost was prohibitive, and it would not have resulted in switching options that would have made projections easier to see. Since there is nothing particularly unique about the design or shape of the original fixtures, preservation was not considered a high priority. The cost of new lighting that mimics the original fixtures in shape and function is much lower.

The recommended fixture is the same size and shape of the original 6" x 6" square fixture, and it runs along the length of the barrels as before. However, the runs are no longer continuous along the length of the barrel, in order to reduce energy use and light levels. A vertically-oriented acoustical panel has been added to the barrels in recent years, and the lighting layout accommodates this panel, hanging below it.

The fixture uses standard high-efficacy T8 fluorescent lamps and programmed-start electronic ballasts that preserve long lamp life even if the occupancy sensors switch lights on and off several times a day. The top row of lamps is switched separately from the downlight row, and the uplight can be switched off for better viewing when data projectors are used. The downward light is shielded by a semi-specular (haze finish) aluminum parabolic baffle, which reduces the brightness of the fixture at angles that normally reflect in computer screens. This complies with IESNA recommendations.

See typical plans for podium level classrooms:

- Typical medium classroom (Humanities, 20’ x 25’)
- Typical large classroom (Humanities, 30’ x 30’)
- Typical science laboratory (30’ x 30’)
- Typical seminar room (Humanities, 10’ x 20’)
- Typical small classroom (Humanities, 20’ x 20’)

4.1.2.2 LARGE LECTURE HALL

4.1.2.2.1 Existing Conditions

Edward Durell Stone designed these spaces with a tiered floor, teaching platform, and the concrete beams running perpendicular to the student’s direction of view. There is a gold-finish metal grille that creates a transparent arch below the ceiling. The lighting is an odd combination of techniques:

- Linear recessed fluorescent fixtures run along the length of the ribs between the barrel vaults, directing light downward. These “light boxes” have acrylic lenses.
- Incandescent accent lights have been added to highlight the teaching platform. (These probably use Par46 incandescent lamps.)
- Linear fluorescent chalkboard lights, probably not original to the design, are awkwardly mounted to the chalkboards and have not held up well.

Figure 59 - Large Lecture Hall

Figure 60 - Large Lecture Hall, view of teaching platform

4.1.2.2.2 Large Lecture Hall Recommendations

These lecture halls, their function, and appearance need to be reviewed by the campus and an architect sensitive to preservation issues. The lighting and control system need to be upgraded to provide a better lighted environment for contemporary teaching. At the very least, multiple levels of switching or dimming are required to provide note-taking lighting for students during projector presentations.

As an interim measure, the University should ensure that the fluorescent fixtures are using high-efficiency T8 lamps and high-efficiency electronic ballasts for energy savings. If the current platform highlighting fixtures use halogen lamps, they can remain as is. If, however, they use standard incandescent lamps and there are no direct halogen replacements, change the fixtures out to a medium-base Par38 halogen track head that can accommodate up to a 250W lamp. Depending on the quantity of fixtures used on the platform, it may be possible to use 100W Par38 “Halogen Infrared” lamps, which are the most efficient form of halogen incandescent lamps available for focal lighting. The lamp designation for these is 100Par38/HIR in a spot or flood version. Lamp life should be a minimum of 3000 hours. (In a few years, when LED replacement lamps are truly functional and affordable, they may become the replacement lamps of choice.)

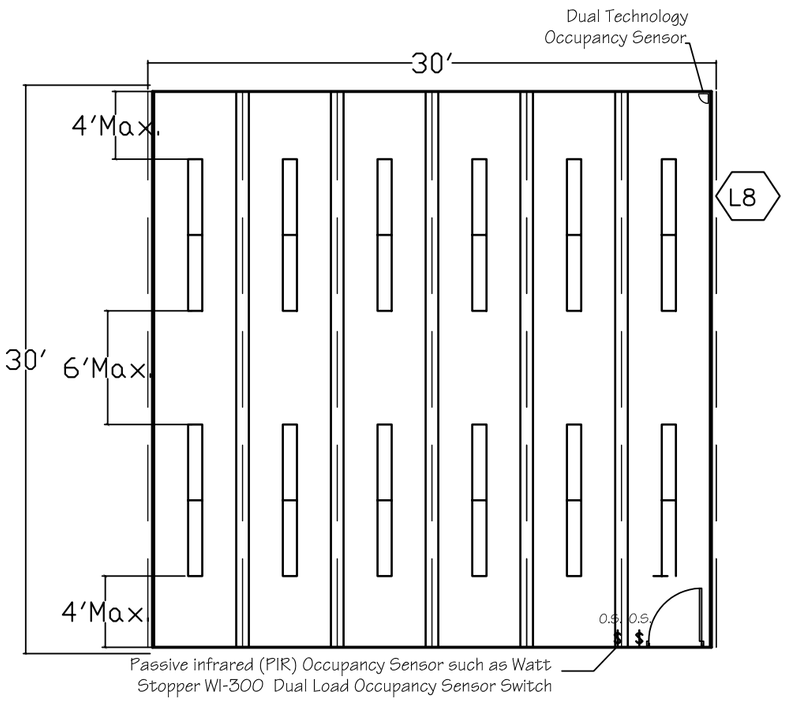

1 Large Classroom Lighting Plan

1/8"=1'-0"

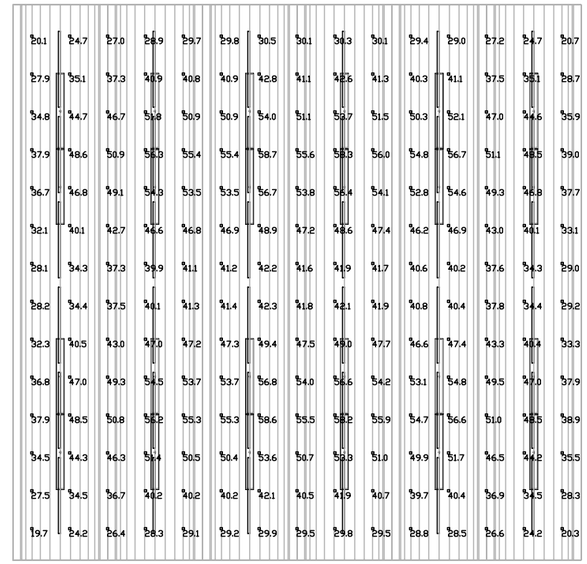

2 Large Classroom Lighting Calculation

1/8"=1'-0"

3 Existing Large Classroom

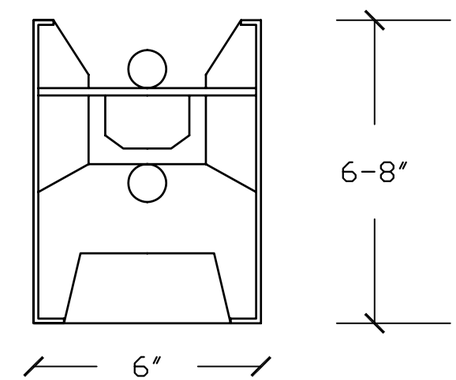

4 Fixture type L8

3"=1'-0"

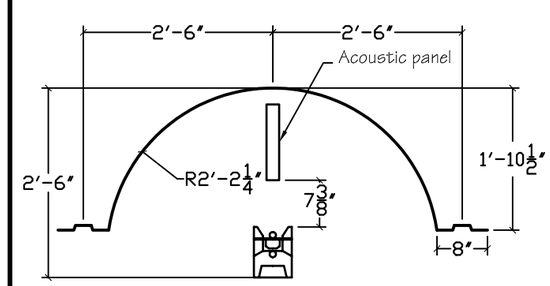

5 Fixture Type L8 Section

1/2"=1'-0"

L8: Typical 30'x30' classroom lighting
Performance specification:

- Suspended direct/indirect linear fixture with box shape, located primarily in office and classrooms with barrel vaults. Approximately 6" wide, 6 to 8" tall. Straight runs only. 4', 8', 12, or 16' runs as shown on plans. Two T8 lamps in cross-section with integral programmed start ballasts (Philips "Optanium" or equivalent.) Tandem-wiring for two-level switching, uplight separate from downlight. White painted housing finish. Semi-specular parabolic louver downward. Minimum luminaire efficiency of 65%. Aircraft cable suspension and flat end caps. Minimum one-year warranty on luminaire, 3 year warranty on ballast.

Approved products:
Neoray 14DIP-1-1-T8-27-SC-Length-Volt-Prostart-S79
or Prudential P-69-1T8/1T8-Length-Semispecular Parabolic Louver
-TMW-D3-DC-Volt-CA48-X3-Prostart
or Alera MS6-1U1D-T8-CM-48-LD-Prostart-Volt-Length-U/B
Lamps: (2) F32T8/835/XPS by GE, Philips, Sylvania per 4' length

Target Illuminance:

- 35-50 fc ambient (average, maintained), Assuming ballast factor of 0.87 and light loss factor (LLF) of 0.75 (incl. BF)

Target Power Density:

- 1.6 W/square foot allowed per New York Energy Code
- Actual power use 1.6 W/square foot as shown.

Switching:

- Uplight on one switch, downlight on second switch. Both switches controlled by dual-technology Occupancy Sensor located as directed by sensor manufacturer (Watt Stopper WI-300 or equivalent)

Date: 05/20/08
Scale: Varies
LD4.121-A
Sheet No.

Large Classroom
Notes:

University at Albany
Lighting Masterplan
Albany, New York

Naomi Miller Lighting Design, LLC
46 23rd Street
Troy, NY 12180-1913 USA
518.272.2745 voice
info@nmlightingdesign.com;
www.nmlightingdesign.com
Naomi Johnson Miller, FIES, FIALD, LC

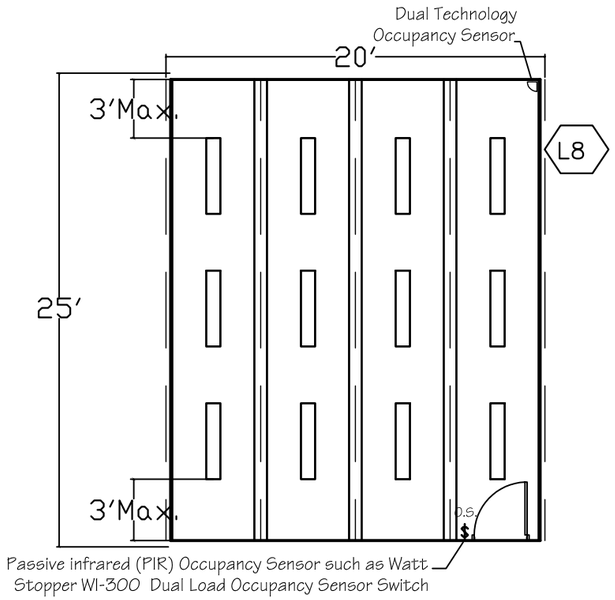

1 Medium Classroom Lighting Plan

1/8"=1'-0"

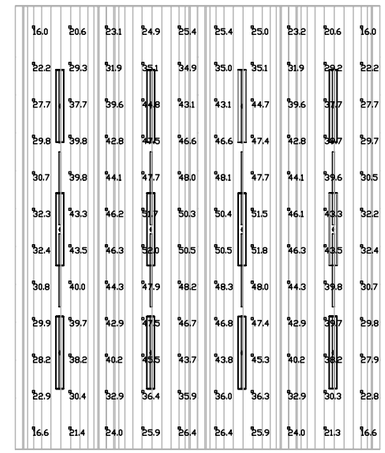

2 Medium Classroom Lighting Calculation

1/8"=1'-0"

3 Existing Medium Classroom

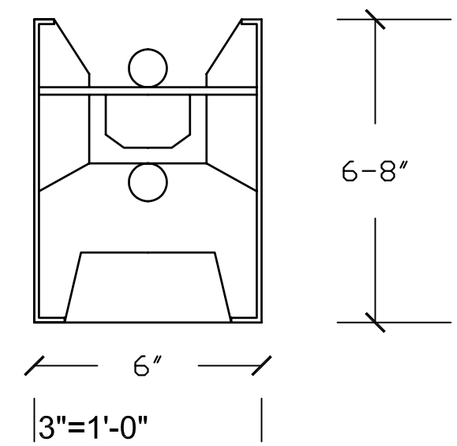

3"=1'-0"

4

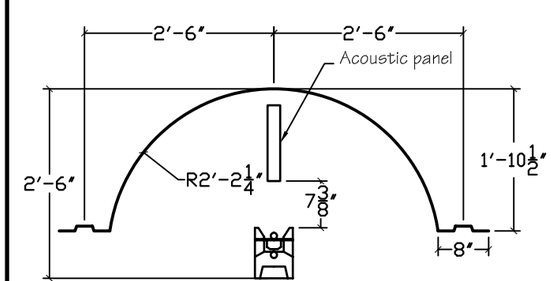

5 Fixture Type L8 Section

1/2"=1'-0"

L8: Typical 20'x25' classroom lighting
Performance specification:

- Suspended direct/indirect linear fixture with box shape, located primarily in office and classrooms with barrel vaults. Approximately 6" wide, 6 to 8" tall. Straight runs only. 4', 8', 12, or 16' runs as shown on plans. Two T8 lamps in cross-section with integral programmed start ballasts (Philips "Optanium" or equivalent.) Tandem-wiring for two-level switching, uplight separate from downlight. White painted housing finish. Semi-specular parabolic louver downward. Minimum luminaire efficiency of 65%. Aircraft cable suspension and flat end caps. Minimum one-year warranty on luminaire, 3 year warranty on ballast.

Approved products:
Neoray 14DIP-1-1-T8-27-SC-Length-Volt-Prostart-S79
or Prudential P-69-1T8/1T8-Length-Semispecular Parabolic Louver
-TMW-D3-DC-Volt-CA48-X3-Prostart
or Alera MS6-1U1D-T8-CM-48-LD-Prostart-Volt-Length-U/B
Lamps: (2) F32T8/835/XPS by GE, Philips, Sylvania per 4' length

Target Illuminance:

- 35-50 fc ambient (average, maintained), Assuming ballast factor of 0.87 and light loss factor (LLF) of 0.75 (incl. BF)

Target Power Density:

- 1.6 W/square foot allowed per New York Energy Code
- Actual power use 1.4 W/square foot as shown.

Switching:

- Uplight on one switch, downlight on second switch. Both switches controlled by dual-technology Occupancy Sensor located as directed by sensor manufacturer (Watt Stopper WI-300 or equivalent)

Date: 05/20/08
Scale: Varies
LD4.121-B
Sheet No.

Medium Classroom
Notes:

University at Albany
Lighting Masterplan
Albany, New York

Naomi Miller Lighting Design,LLC
46 23rd Street
Troy, NY 12180-1913 USA
518.272.2745 voice
info@nmlightingdesign.com;
www.nmlightingdesign.com
Naomi Johnson Miller, FIES, FIALD, LC

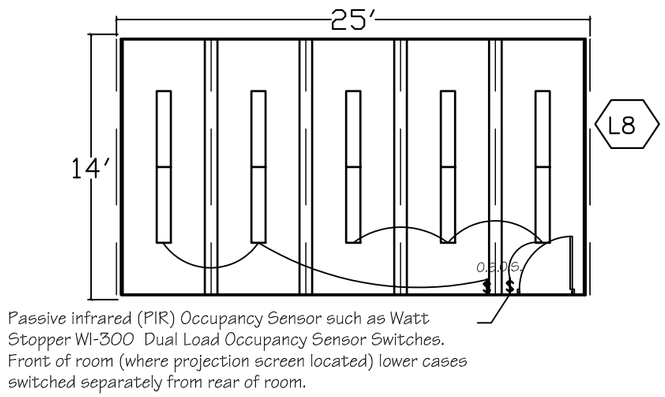

1 Small Classroom Lighting Plan

1/8"=1'-0"

3 Existing Small Classroom

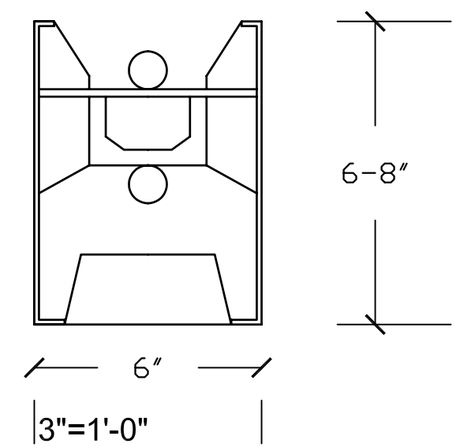

3"=1'-0"

4

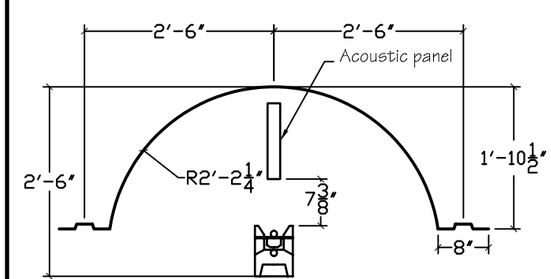

5 Fixture Type L8 Section

1/2"=1'-0"

Typical Seminar room lighting (20'x25' classroom)

Performance specification: for Fixture Type L8

- Suspended direct/indirect linear fixture with box shape, located primarily in office and classrooms with barrel vaults. Approximately 6" wide, 6 to 8" tall. Straight runs only. 4', 8', 12, or 16' runs as shown on plans. Two T8 lamps in cross-section with integral programmed start ballasts (Philips "Optanium" or equivalent.) Tandem-wiring for two-level switching, uplight separate from downlight. White painted housing finish. Semi-specular parabolic louver downward. Minimum luminaire efficiency of 65%. Aircraft cable suspension and flat end caps. Minimum one-year warranty on luminaire, 3 year warranty on ballast.

Approved products:
Neoray 14DIP-1-1-T8-27-SC-Length-Volt-Prostart-S79
or Prudential P-69-1T8/1T8-Length-Semispecular Parabolic Louver -TMW-D3-DC-Volt-CA48-X3-Prostart
or Alera MS6-1U1D-T8-CM-48-LD-Prostart-Volt-Length-U/B
Lamps: (2) F32T8/835/XPS by GE, Philips, Sylvania per 4' length

Target Illuminance:

- 35-50 fc ambient (average, maintained), Assuming ballast factor of 0.87 and light loss factor (LLF) of 0.75 (incl. BF)

Target Power Density:

- 1.6 W/square foot allowed per New York Energy Code
- 2.6 W/square foot if currently equipped with 3-lamp Corelite fixtures.
- Actual power use 1.4 W/square foot as proposed above.

Switching:

- Uplight on one switch, downlight on second switch. Both switches controlled by dual-technology Occupancy Sensor located as directed by sensor manufacturer (Watt Stopper WI-300 or equivalent)

Date: 05/20/08
Scale: Varies
Sheet No. LD4.121-C

Seminar Room
(Small Classroom)
Notes:

University at Albany
Lighting Masterplan
Albany, New York

Naomi Miller Lighting Design,LLC
46 23rd Street
Troy, NY 12180-1913 USA
518.272.2745 voice
info@nmlightingdesign.com;
www.nmlightingdesign.com
Naomi Johnson Miller, FIES, FIALD, LC

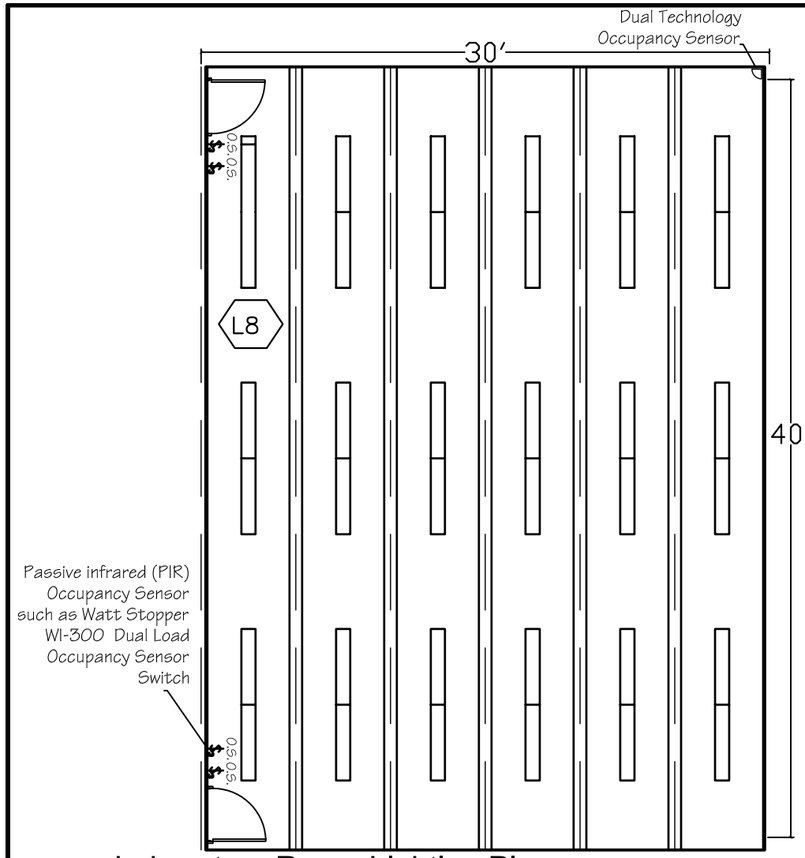

1 Laboratory Room Lighting Plan

1/8"=1'-0"

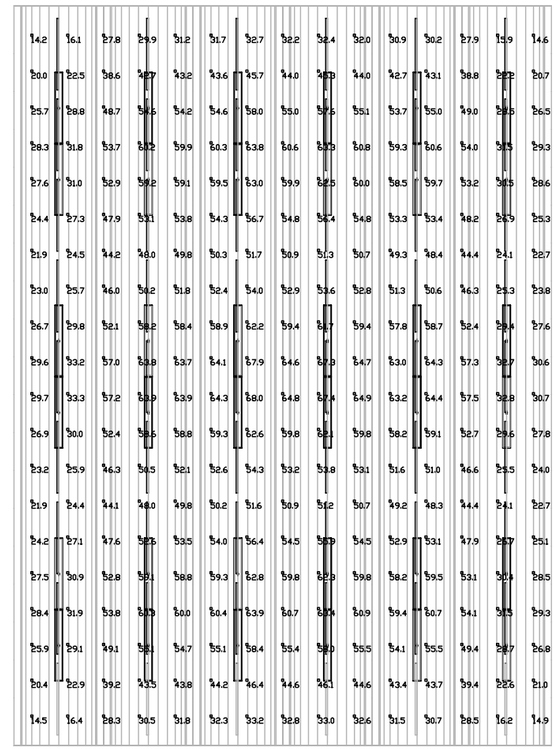

2 Laboratory Room Lighting Calculation

1/8"=1'-0"

3 Existing Laboratory Room

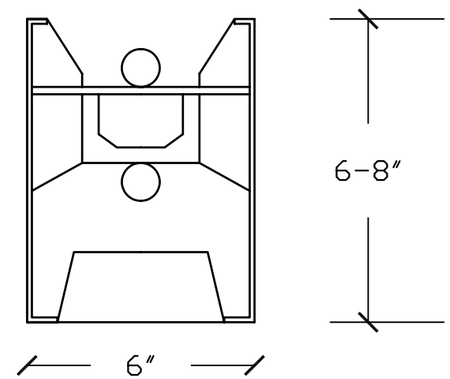

4 Fixture type L8

3"=1'-0"

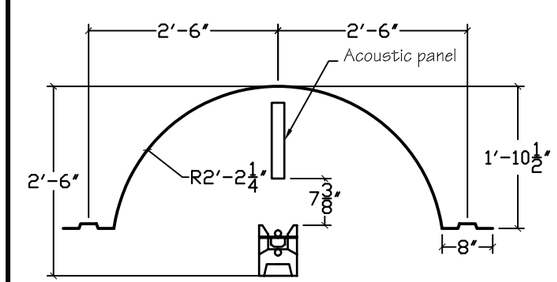

5 Fixture Type L8 Section

1/2"=1'-0" Section thru barrel vault showing acoustical panel

L8: Typical 30'x40' classroom lighting

Performance specification:

- Suspended direct/indirect linear fixture with box shape, located primarily in office and classrooms with barrel vaults. Approximately 6" wide, 6 to 8" tall. Straight runs only. 4', 8', 12, or 16' runs as shown on plans. Two T8 lamps in cross-section with integral programmed start ballasts (Philips "Optanium" or equivalent.) Tandem-wiring for two-level switching, uplight separate from downlight. White painted housing finish. Semi-specular parabolic louver downward. Minimum luminaire efficiency of 65%. Aircraft cable suspension and flat end caps. Minimum one-year warranty on luminaire, 3 year warranty on ballast.

Approved products:

Neoray 14DIP-1-1-T8-27-SC-Length-Volt-Prostart-S79
or Prudential P-69-1T8/1T8-Length-Semispecular Parabolic Louver
-TMW-D3-DC-Volt-CA48-X3-Prostart
or Alera MS6-1U1D-T8-CM-48-LD-Prostart-Volt-Length-U/B

Lamps: (2) F32T8/835/XPS by GE, Philips, Sylvania per 4' length

Target Illuminance:

- 35-50 fc ambient (average, maintained), Assuming ballast factor of 0.87 and light loss factor (LLF) of 0.75 (incl. BF)

Target Power Density:

- 1.6 W/square foot allowed per New York Energy Code
- Actual power use 1.7 W/square foot as shown.

Switching:

- Uplight on one switch, downlight on second switch. Both switches controlled by dual-technology Occupancy Sensor located as directed by sensor manufacturer (Watt Stopper WI-300 or equivalent)

Date: 05/20/08

Scale: Varies

LD4.121-D

Sheet No.

Laboratory Room

Notes:

University at Albany

Lighting Masterplan
Albany, New York

Naomi Miller Lighting Design, LLC
46 23rd Street
Troy, NY 12180-1913 USA
518.272.2745 voice
info@nmlightingdesign.com;
www.nmlightingdesign.com;
Naomi Johnson Miller, FIES, FIALD, LC

4.1.2.3 UPTOWN CAMPUS CORRIDORS

Goals for lighting of corridors include providing

- Non-directional lighting that lights faces so they are easily identified and pleasant in appearance
- Sufficient lighting for seeing signage, room numbers, bulletin boards, artwork, etc.
- Lighting that is sufficiently uniform that there are no spooky corners or distracting harsh scallops of light on walls. Corridors must look and feel safe for users.
- Lighting that is energy efficient, using long-life lamps, and easy to maintain

4.1.2.3.1 Existing Conditions

The original lighting in academic building corridors was recessed incandescent downlights with Fresnel lenses, spaced in one row or two, depending on the width of the corridor. This provided adequate lighting, but was maintenance- and energy-intensive. The remaining corridor fixtures like this have relamped with self-ballasted compact fluorescent lamps, or else replaced with 4' long prismatic lens "wraparounds" running perpendicular to the corridor's length. Some retrofitted fixtures with compact fluorescent make corridors look dim, because the lamp wattage is lower than the 20W needed to equal the light output of a conventional 75W incandescent lamp.

Figure 61 - Typical Podium building corridor with incandescent downlights

Figure 62 - Original Fresnel lens downlights in Podium building corridor

Figure 63 - Corridor using 4' fluorescent "wraparound lens" fixtures

In recent Podium building renovations the corridors have been upgraded with new 2X4 T-bar ceiling systems and acoustical tiles, and 2x4 "recessed indirect" fixtures. These

fixtures have a white upper reflector and a perforated metal center basket that holds the lamps and directs the light up into the white reflector. These fixtures are good in corridors because they are visually comfortable and emit light softly toward walls and faces. Corridors look pleasantly bright as a result.

Figure 64 - Recently remodeled corridor with "recessed indirect" fixtures

4.1.2.3.2 Recommendations for Academic Building Corridors

The "recessed indirect" 2x4 fluorescent fixtures do a good job of lighting corridors pleasantly, uniformly, and efficiently. As corridors are remodeled, two-lamp T8 fluorescent fixtures can be installed, either parallel to walls or perpendicular to walls, spaced 12' on center. The only difference between what the University has specified for these corridors in recent years and the recommendation here is that the recommended fixtures have a louvered section in the perforated basket section to direct some light downward. This increases fixture efficiency.

Wider corridors are shown with 2x4 fixtures **(Fixture Type F2).** Narrow corridors are shown with 1x4 fixtures **(Fixture Type F1).** See examples of typical corridors:

- Typical Podium academic building wide corridor – layout parallel
- Typical Podium academic building wide corridor – layout perpendicular
- Typical Podium academic building upper level narrow corridor
- See Dormitory Section for typical dormitory corridor

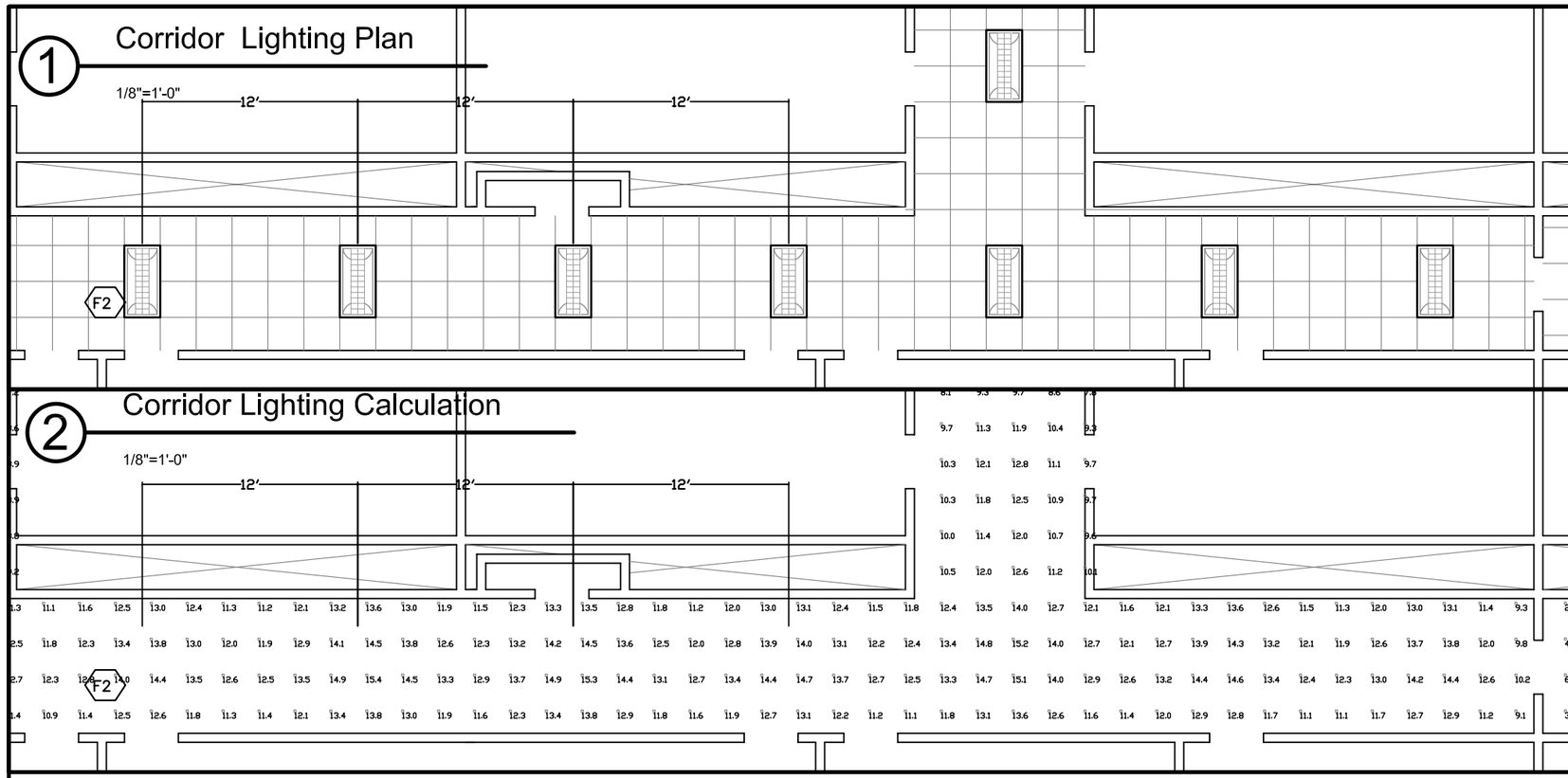

3 Existing Corridor

1"=1'-0"

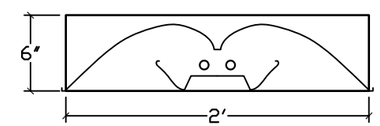

4 Fixture F2 Section

1"=1'-0"

F2 Typical academic corridor lighting (perpendicular to walls)
Performance specification:

- Recessed 2'x4' fluorescent "direct/indirect" troffer with louvered downlight. Two T8 fluorescent lamps in cross section. Integral programmed start electronic ballast, Universal B232PUNVHP-A or equivalent. Mounting will vary according to installation, so ceiling type in catalog number has been replaced with "CLG". Minimum 60% luminaire efficiency. Minimum one-year warranty on luminaire, 3-year warranty on ballast.

Approved products:
Columbia STRL24-232-CLG-WCBMPO-EB-Prostart-Volt
or Linear Lighting CBL24-D2ET8-PRD/PXL-CLG-BW-PSB10-4
or Lightolier PPS2-CLG-6WW232-Volt-Prostart

Lamps: (2) F32T8/835/XPS by GE, Philips, Sylvania

Locating instructions

- Remove existing recessed downlights and acoustical ceiling tile as necessary
- Replace with recessed linear fluorescent indirect/direct "basket" troffer.
- Locate the troffer in the center of the corridor. Structure ACT ceiling around this location and layout.
- Space recessed troffers 12' on center (O.C.)
- Orient the fixture so the long-axis (4' length) is perpendicular to the length of the hallway.

Target Illuminance:

- 10 fc average maintained, assuming ballast factor of 0.87 and light loss factors (LLF) of 0.75 (incl. BF)

Target Power Density:

- 0.8 W/square foot allowed per New York Energy Code
- Installed LPD will be approximately 0.6 W/square foot per 12' O.C. spacing with specified ballast

Controls :

- Passive infrared ceiling sensors can be installed to automatically switch off 2/3 of fixtures at night.

Date: 05/20/08
Scale: Varies
Sheet No. LD4.123-A

Typical Corridor
Notes: Perpendicular

University at Albany
Lighting Masterplan
Albany, New York

Naomi Miller Lighting Design, LLC
46 23rd Street
Troy, NY 12180-1913 USA
518.272.2745 voice
info@nmlightingdesign.com;
www.nmlightingdesign.com
Naomi Johnson Miller, FIES, FIALD, LC

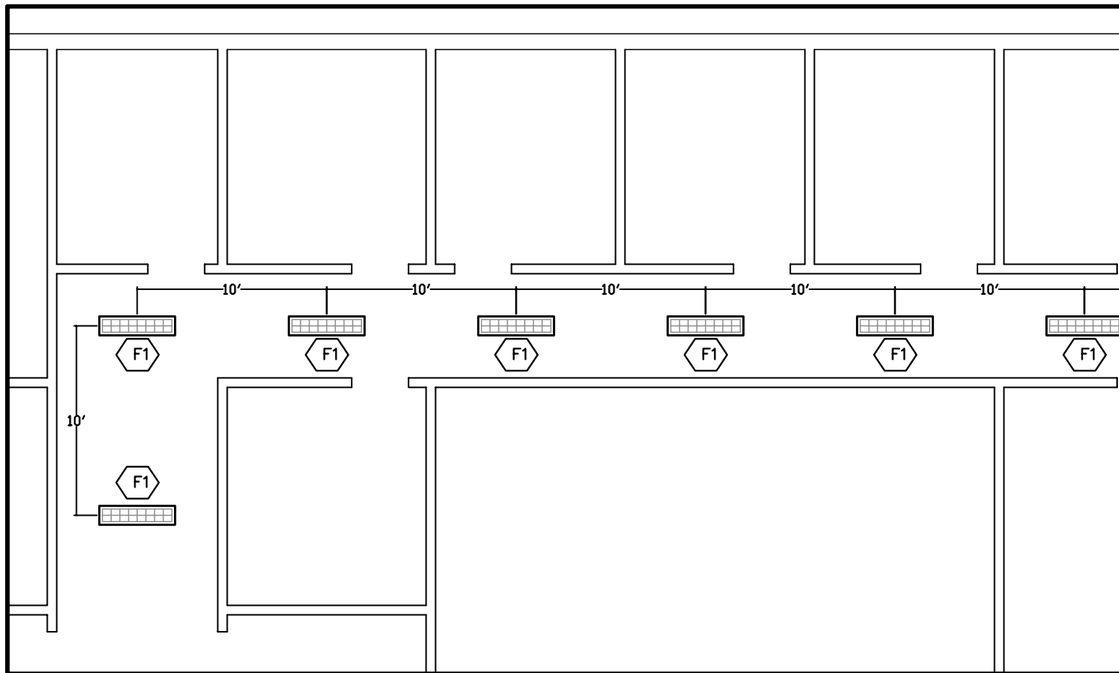

1 Corridor Lighting Plan

1/8"=1'-0"

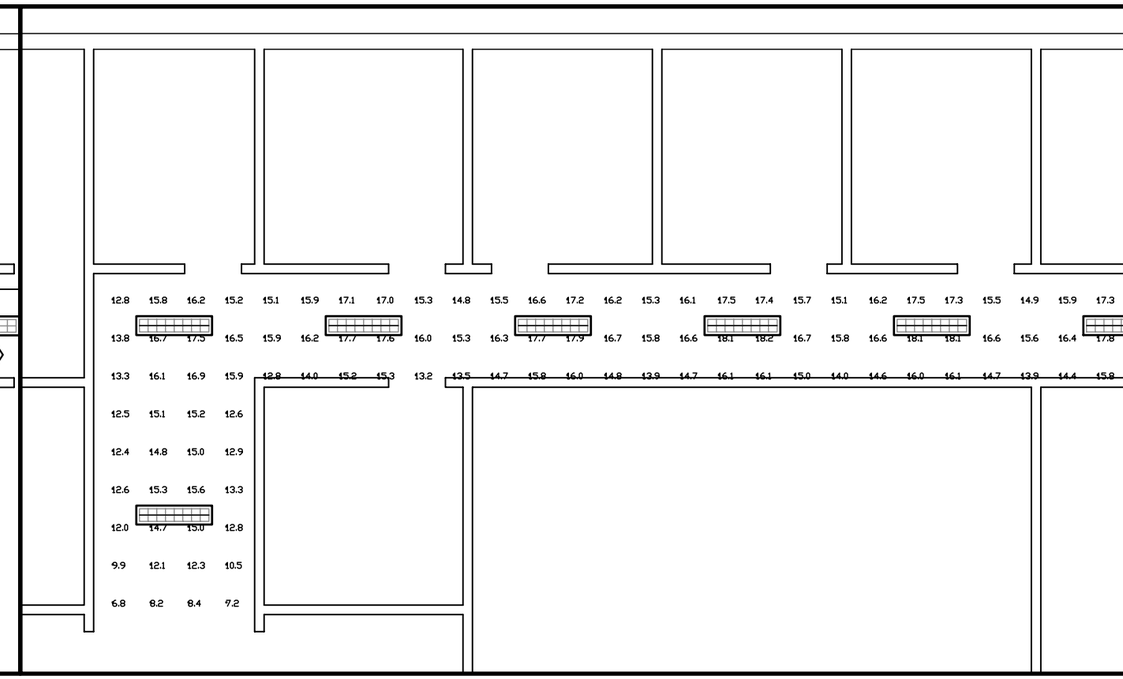

2 Corridor Lighting Calculation

1/8"=1'-0"

F1: Podium Building Upper Level corridor lighting
Performance specification:
Recessed 1'x4' fluorescent "direct/indirect" troffer with louvered downlight. One T8 fluorescent lamp in cross section. Integral programmed start electronic ballast, Universal B132PUNVHP-A or equivalent. Mounting will vary according to installation, so ceiling type in catalog number has been replaced with "CLG". Minimum 60% luminaire efficiency. Minimum one-year warranty on luminaire, 3-year warranty on ballast.

Approved products:
Columbia STRL14-132-CLG-WCBMPO-EB-Prostart-Volt
or Linear Lighting
CBL14-D1ET8-PRD/PXL-CLG-BW-PSB10-4
or Lightolier PPS1-CLG-6WW132-Volt-Prostart

Lamps: (1) F32T8/835/XPS by GE, Philips, Sylvania

Locating instructions

- Remove existing recessed downlights and acoustical ceiling tile as necessary
- Replace with recessed linear fluorescent indirect/direct "basket" troffer.
- Locate the troffer in the center of the corridor. Structure ACT ceiling around this location and layout.
- Space recessed troffers 12' on center (O.C.)
- Orient the fixture so the long-axis (4' length) is perpendicular to the length of the hallway.

Target Illuminance:

- 10 fc average maintained, assuming ballast factor of 0.87 and light loss factors (LLF) of 0.75 (incl. BF)

Target Power Density:

- 0.8 W/square foot allowed per New York Energy Code
- Installed LPD will be approximately 0.6 W/square foot per 12' O.C. spacing with specified ballast

Controls :

- Passive infrared ceiling sensors can be installed to automatically switch off 2/3 of fixtures at night.

3 Existing Corridor

1"=1'-0"

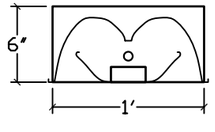

4 Fixture F1 Section

1"=1'-0"

Date: 05/20/08
Scale: Varies
LD4.123-C
Sheet No.

Podium Building
Notes:
Upper Level

University at Albany
Lighting Masterplan
Albany, New York

Naomi Miller Lighting Design, LLC
46 25rd Street
Troy, NY 12180-1913 USA
518.272.2745 voice
info@nmlightingdesign.com;
www.nmlightingdesign.com

4.1.2.4 PODIUM AREA LOBBY – CAMPUS CENTER

4.1.2.4.1 Existing Conditions

The Campus Center Lobby is currently lighted with a large central 9' diameter "saucer light" plus a series of recessed downlights along the entry door wall. The saucer is very dirty, uses old-technology poor-color metal halide lamps, and has sustained some damage over the last forty years of service. The recessed fixtures originally grazed the vertical concrete elements and put light at the floor along the entry doors. Unfortunately these downlights are virtually impossible to relamp, so they are not maintained. Many of the fixtures no longer function even when relamped.

Figure 65 - Campus Center Lobby

4.1.2.4.2 Recommendations for Podium Area Lobbies

The perimeter recessed downlights should be abandoned and the holes in the ceiling covered so that they are concealed from view.

To replace the light from the recessed downlights, install "box light" wall sconces that direct light upward and downward. The same box lights that serve this purpose outdoors may be used, mounted as shown in the lighting plans. The wall sconce contains the ballasts so there is no concern about access to remote ballasts. The painted finish should match the interior paint finish of the lobby.

The large saucer **(Fixture Type Q3)** may be renovated just as the smaller saucer, but it may have to be renovated in place because it may be too large to remove from the building. Like Fixture Type Q1, it can be remodeled with fluorescent lamps, but the fluorescent uplight sections can utilize 4' lamps instead of 2' lamps. (Eight 4' T5HO lamps, total.) The number of 2" diameter holes for downlight around the perimeter of the saucer is 16 instead of 12, necessitating a total of (17) "Genura" screwbase lamps (GE EL23/R25/WW). The fluorescent lamps in the saucer should be powered by an

emergency lighting circuit. (In future years these lamps can be replaced with medium base LED replacements, when the technology has matured and the price has dropped considerably.)

The area at the doors to the Dining Center, below the stairs, are very dark. Add one 12' long T8 fluorescent up/down fixture **(Fixture Type J1)**, centered approximately 6" above the doors. The fixture shields the direct view of the bright lamp so that it is not glaring.

Performance specification for **Fixture Type Q3** Saucer Pendant:

Existing "saucer light", to be removed from ceiling *and renovated in place* because fixture is too large to be removed from the building. Saucer is approximately 9' in diameter, made of spun aluminum, with sixteen 2" diameter glass apertures for downlight, and one central cavity for downlight accessible from removable grille. Manufacturer to remove existing wiring and internal fixtures. Replace with two circuits of lighting: four 2-lamp asymmetrical 4' long T5 fluorescent uplights, one 23W reflector "Genura" reflector lamp in center downlight section accessible by star-pattern grille, and (16) 23W reflector "Genura" reflector lamps held in ring above glass lens, aimed through existing glass apertures. Manufacturer shall remove all metal dents and ripples, repair damaged parts, and reconfigure internal lighting products (recognizing that the results will not be perfect since the saucer cannot be shipped to the factory). Manufacturer shall repaint saucer to match original paint finish. Saucer is currently suspended from four mounting points.

Approved manufacturer: Klemm Reflector. Contact Mike O'Hearn at Total Lighting Concepts (518) 453.9445 for information.

Lamps:

(8) F54T5HO/835 lamps

(17) EL23/R25/WW "Genura" lamps by GE. These are an electrodeless version of compact fluorescent to be used until screwbase white LED lamps are better in performance and more reasonable in cost.

Performance specification for the **Fixture Type S3** up/down sconce:

- Direct/indirect wall sconce to replace existing sconce. Heavy gauge aluminum square cylinder housing, 8-5/8" square x 20.25" tall, welded to a wall case that houses the wiring compartment. Wall case is 18-3/4" tall x 7" wide and hook-mounts to a wall support, fixed with bolts, with an EPDM gasket to seal the luminaire from dust and water infiltration. Overall projection shall not exceed 12-1/8". Two high-frequency electronic ballasts, approved manufacturers of Advance, Vossloh-Schwabe, and OsramSylvania, are mounted to the heavy-gauge galvanized steel wall support. University to supply manufacturer with paint color chip to match original paint finish of box lights. For use on all exposed housing materials.
- Lamp sockets shall be mounted on sliding horizontal mounts, fastened down with wing nuts so that the upward lamp is aimed 15 degrees from vertical away from the mounting wall, and downward lamp is aimed 20 degrees from

vertical away from the mounting wall. Lamp sockets shall be centered 2" from the inside face of the cylinder, so that when aimed, none of the direct light of the lamp strikes the inside of the cylinder.

- Lens frame is formed from low copper aluminum (356 alloy) to minimize corrosion, and silicone gasket to seal out contaminants. Lamp access through two captive screws in frame. Lenses in both top and bottom frame are "Solite" or equivalent microprism tempered glass, minimum 6" diameter or square, mounted so that top of lens is flush with the lens frame to allow water to run off. No baffle required in either aperture.
- The ballasts are wired with quick disconnect plugs, pre-wired at the factory.
- The socket shall be a 4KV pulse-rated medium base for a 39W Par30 metal halide lamp.
- All exterior hardware, including captive screws, are made of stainless steel.
- UL listed.
- Minimum one-year warranty on luminaire, 3 year warranty on ballast.
- Manufacturer shall provide a working sample to lighting designer with submittal drawings.
- Voltage as specified by University at Albany.

Approved product: SDL "SLF2520-UAD-Solite-39Par30CMH-B-Voltage-Painted Finish"
Lamps: (2) CMH39/Par30/FL25 lamps.
(Approximate cost: $600 including lamp to the University at Albany when ordered along with exterior box lights in large quantities.)

Performance specification for **Fixture Type J1** linear fluorescent fixture above doors:

- Wall-mounted up/down linear fluorescent fixture, with extruded aluminum housing 3.5"H x 7-7/8" projection. 12' length, total. Fixture will require 1.25" wall spacer in order to clear existing vertical structural members. See detail. One T8 fluorescent lamp in cross-section, with integral programmed rapid-start electronic ballast. Painted finish to match existing structural member, University at Albany to provide paint chip or RAL number to match.) Upward aperture to have clear acrylic dust cover, downward aperture to have semi-specular aluminum cross-baffle.

Approved luminaire: Neoray (by Cooper Lighting) Series 66DIW-1T8-12'-Voltage-EB-Prostart-SI-Dustcover-S79-MOD with wall spacer, or equal by Litecontrol or Metalumen.
Lamp: (3) F32T8/XPS/835 or equivalent

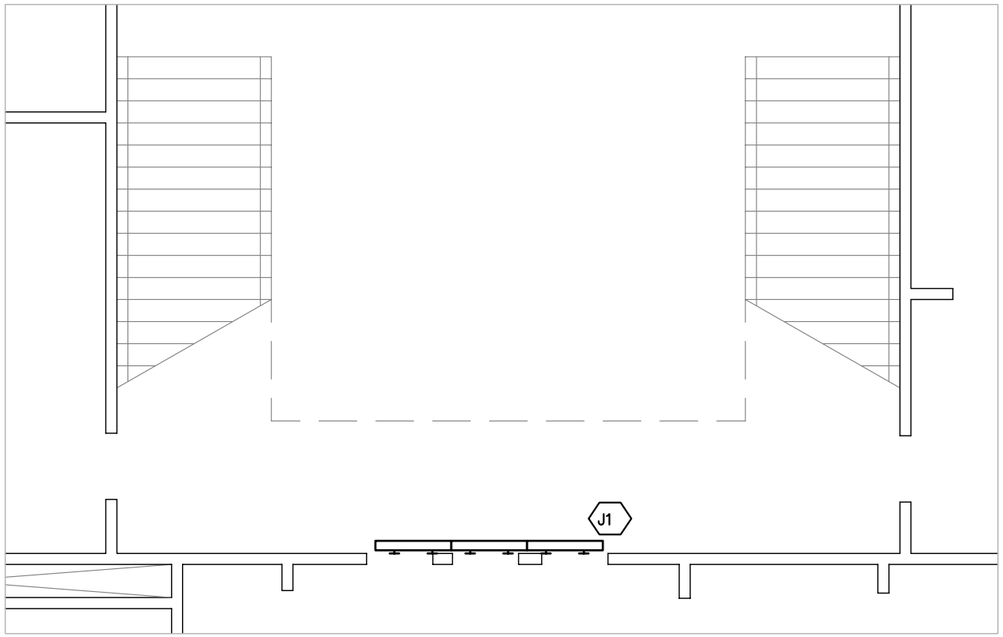

1 Entrance Hall Lighting Plan

1/8"=1'-0"

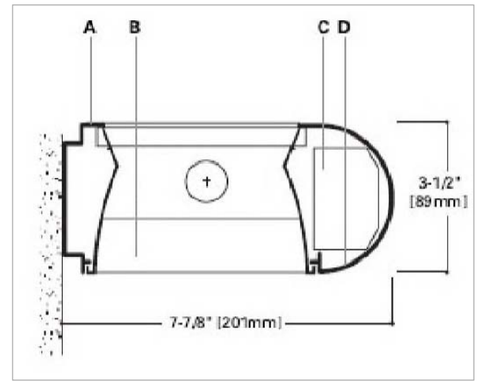

2 Fixture J1

3"=1'-0"

3 Campus Center Lobby

4 Fixture Type Q3

Entrance Hall

Performance Specification: For Fixture Type J1

- Wall-mounted up/down linear fluorescent fixture, with extruded aluminum housing 3.5" H x 7-7/8" projection. 12' length, total. Fixture will require 1.25" wall spacer in order to clear existing vertical structural members. See detail. One T8 fluorescent lamp in cross-section, with integral programmed start electronic ballast. Painted finish to match existing structural member, University at Albany to provide paint chip or RAL number to match.) Upward aperture to have clear acrylic dust cover, downward aperture to have semi-specular aluminum cross-baffle.

Approved Product:

- NeoRay (by Cooper Lighting) Series 66DIW-1T8-12'-Voltage-EB-Prostart-SI-Dust cover-S79-MOD with wall spacer
- or equal by Lite control, Metalumen.

Performance Specification: For Fixture Type Q3 Saucer pendant

- Existing "Saucer light", to be removed from ceiling and renovated in place because fixture is too large to be removed from the building. Saucer is glass apertures for downlight, and one central cavity for downlight accessible from removable grille. Manufacturer to remove existing wiring and internal fixtures. Replace with two circuits of lighting: four 2-lamp asymmetrical 4' long T5 fluorescent uplights, one 23W reflector "Genura" reflector lamps held in ring above glass lens, aimed through existing glass apertures. Manufacturer shall remove all metal dents and ripples, repair damage parts, and reconfigure internal lighting products (recognizing that the results will not be perfect since the saucer cannot be shipped to the factory). Manufacturer shall repaint saucer to match original painted finish. Saucer is currently suspended from four mounting points.

Approved manufacturer:

- Klemn Reflector. Contact Mike O'Hearn at Total Lighting Concepts (518) 453.9445 for information.

Lamps:

(8)F54T5HO/835/XPS lamps,
(17)EL23/R25/WW"Genura" lamps by GE. These are an electrodeless version of compact fluorescent to be used until screwbase white LED lamps are better in performamce and more reasonable in cost.

Date: 05/20/08
Scale: Varies
Sheet No. LD4.124-A

Large Lobby
Notes:
Entrance Hall

University at Albany
Lighting Masterplan
Albany, New York

Naomi Miller Lighting Design,LLC
46 23rd Street
Troy, NY 12180-1913 USA
518.272.2745 voice
info@nmlightingdesign.com;
www.nmlightingdesign.com
Naomi Johnson Miller, FIES, FIALD, LC

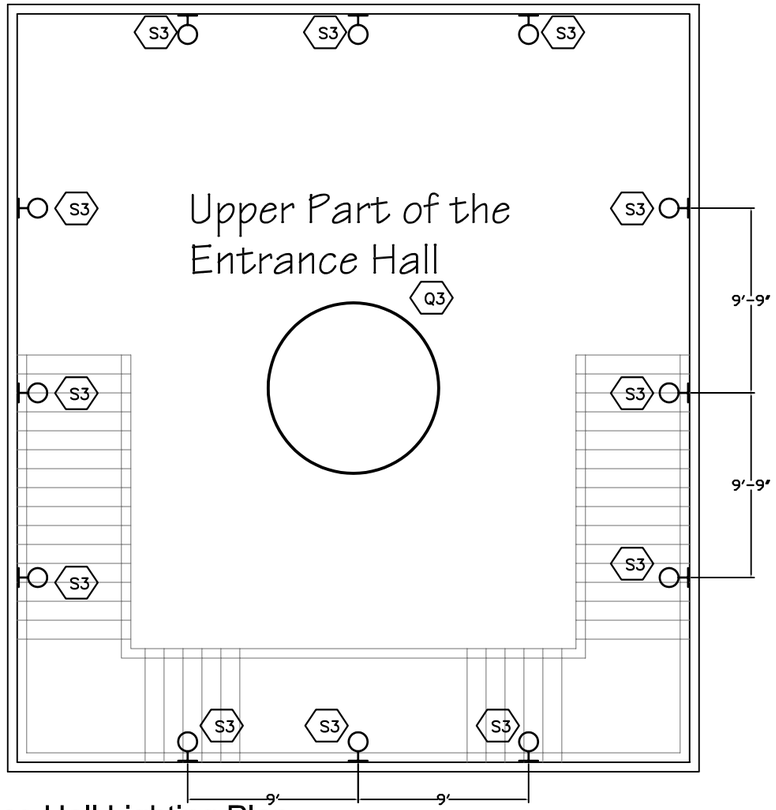

1 Entrance Hall Lighting Plan

1/8"=1'-0"

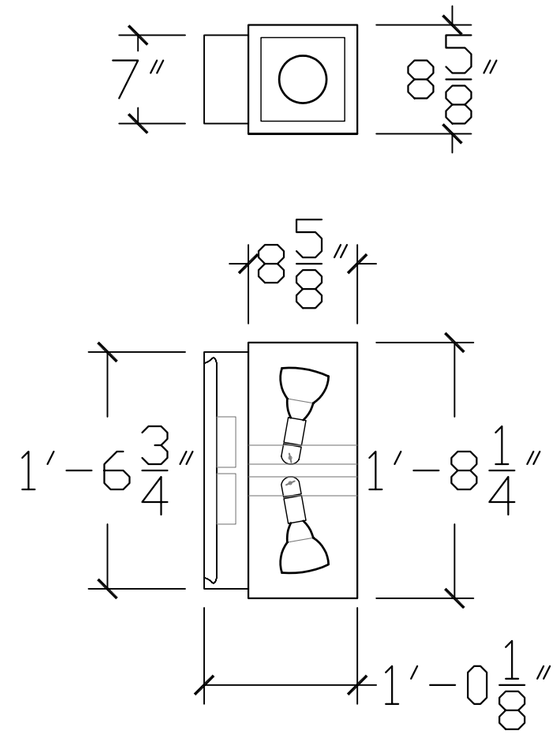

2 Fixture S3

1"=1'-0"

Entrance hall : Upper part

Performance Specification: For Fixture Type S3 up/down scone at entrance hall

- Direct/indirect wall scone to replace existing sconce. Heavy guage aluminum square cylinder housing, 8-5/8" square x 20.25" tall, welded to a wall case that houses the wiring compartment. Wall case is 18-3/4" tall x 7" wide and hook-mounts to a wall support, fixed with bolts, with an EPDM gasket to seal the luminaire from dust and water infiltration. Overall projection shall not exceed 12-1/8". Two high-frequency electronic ballasts, approved manufacturers of Advance, Vossloh-Schwabe, and OsramSylvania, are mounted to the heavy-gauge galvanized steel wall support. University to supply manufacturer with painted color chip to match original paint finish of box lights. For use on all exposed housing materials.
- Lamp sockets shall be mounted on sliding horizontal mounts, Fastened down with wing nuts so that the upward lamp is aimed 15 degrees from vertical away from the mounting wall, and downward lamp is aimed 20 degrees from vertical away from the mounting wall. Lamp socket shall be center 2" from the inside face of the cylinder, so that when aimed, none of the direct light of the lamp strikes the inside of the cylinder.
- Lens frame is formed from low copper aluminum (356alloy) to minimize corrosion, and silicone gasket to seal out contaminants. Lamp access through two captive screws in frame. lenses in both top and bottom frame are "Solite" or equivalent microprism tempered glass, minimum 6" diameter square, mounted so that top of lens is flush with the lens frame to allow water to run off. No baffle required in eitheraperture.
- The ballasts are wired with quick disconnect plugs, pre-wired at the factory.
- The socket shall be a 4KV pulse-rated medium base for a 39W PAR30 MH lamp
- All exterior hardware, includingcaptive screws, are amde of stainless steel.
- UL listed for Wet Locations.
- Minimum one-year warranty on luminaire, 3 year warranty on ballast.
- Manufacturer shall provide a working sample to lighting designer with submittal drawings.
- Voltage as specified by University at Albany.

Approved products:

- SDL "SLF2520-UAD-Solite-39Par30CMH-B-Voltage-Grey Painted finish"

Lamp: (2)CMH 39/Par30/FL25 by GE, Sylvania, or Philips.

Date: 05/20/08

Scale: Varies

LD4.124-B

Sheet No.

Large Lobby

Notes:
Upper part of the entrance hall

University at Albany

Lighting Masterplan
Albany, New York

Naomi Miller Lighting Design,LLC
46 23rd Street
Troy, NY 12180-1913 USA
518.272.2745 voice
info@nmlightingdesign.com;
www.nmlightingdesign.com
Naomi Johnson Miller; FIES, FIALD, LC

4.1.2.5 PODIUM BUILDING LOBBY – PERFORMING ARTS CENTER (PAC)

The Performing Arts Center is a destination for students and public alike. Its lobby is an excellent example of the original Edward Durell Stone architecture, and should be preserved as much as possible. It is a formal public space.

4.1.2.5.1 Existing Conditions

Until recent years, 9' diameter Saucer lights were a prominent architectural feature of the PAC lobby. Unfortunately, these were removed for reasons that were valid at the time, but didn't consider the architectural history of the campus as strongly as we do now. They were replaced with clusters of metal halide glowing bowl pendants (see figure), with polished brass metal details. These replacement pendants are stylistically out of place.

Like the Campus Center Lobby, the PAC has recessed downlights that used to brighten tall walls, downlights that are almost impossible to reach for relamping and cleaning. Dimming and multiple switching options are very important here, for use in nighttime functions, but the options are limited because of the light sources used.

Figure 66 - Existing chandeliers at Performing Arts Center Lobby

Figure 67 - Performing Arts Center Lobby - Downlights over stairs

Figure 68 - PAC Lobby Lower Level showing clusters of recessed downlights

4.1.2.5.2 Recommendations for the Performing Arts Center Lobby

The Saucer lights should return to this architecturally prominent public lobby, as should the original layout and effect of recessed downlights. We recommend the following:

- Although 9' diameter lights are probably no longer available on the campus, there are smaller saucer lights that will be removed from the Indian Quad dining hall, for example. These should be refurbished, and installed here with the fluorescent uplights controlled separately from halogen lights in the saucer (**Fixture Type Q4**). The appearance and function of the saucers will be the same as those in the Campus Center Ballroom, with the halogen lights fully dimmable.
- Remove the existing recessed downlight trims on the upper and levels, and install **Fixture Type D1** to replace it. This is an innovative white LED product that fits into the existing fixture housing, and contains an array of LEDs behind a phosphored lens. The lens is regressed about 1.5" from the aperture, so it will look similar to the original lensed downlight. This LED product has extensive heat-sinking built into it, so it should last close to

50,000 hours before the LEDs have degraded to less than 70% of their original output. (That's over 10 years of operation if burned 12 hours a day.) The unit draws only 12W, compared to 60W or more for the original incandescent lamp. The light color is 3500K, which is whiter than the original incandescent lamp, but it will match the other linear fluorescent lamps used in the building. Each of these retrofit products costs about $75 when ordered in large quantities. These fixtures can be dimmed using standard incandescent dimmers, but dimming introduces flicker at this point in time. It may not be noticeable if used with the saucer lights at the same time.

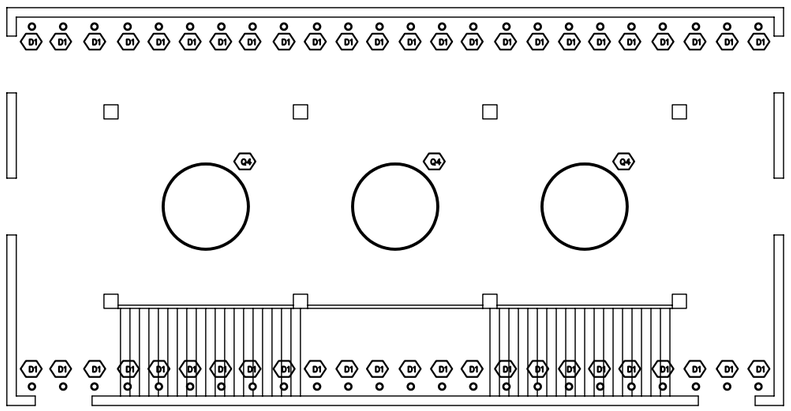

1 PAC Upper Lobby Lighting Plan

1/16"=1'-0"

2 Upper PAC Lobby

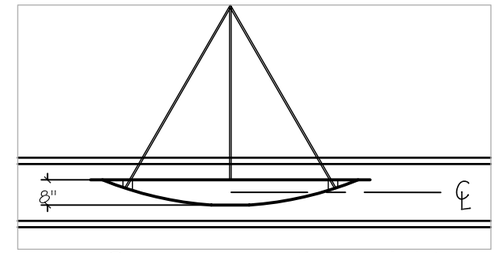

3 Saucer mounting height

1/4" = 1'-0"

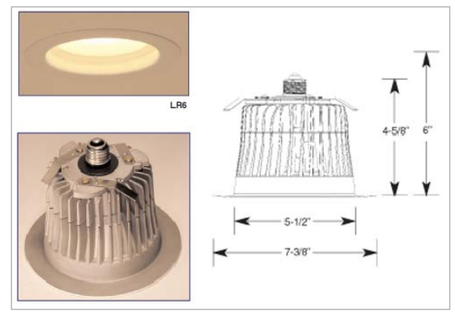

4 Fixture Type D1

NTS

5 Fixture Type Q4

PAC Upper lobby lighting

Performance specification: For Fixture Type D1

- Retrofit LED unit to replace the lamp and fresnel lens trim of original 6" diameter recessed incandescent downlights. 3500K (neutral) light color. Integral power supply. System to produce no perceivable flicker. System efficacy minimum 54 LPW. Pewter anodized trim cone.

Approved manufacturer:

- Klemn Reflector. Contact Mike O'Hearn at Total Lighting Concepts (518) 453.9445 for information.

Lamps:

LED included

Performance Specification: For Fixture Type Q4 : Saucer pendant

- Existing "saucer light", to be removed from Campus Dining Hall and renovated at factory. Saucer is approximately 7'-8" in diameter, made of spun aluminum, with twelve 2" diameter glass apertures for downlight, and one central cavity for downlight accessible from removable grille. Manufacturer to renovate one saucer, removing existing wiring and internal fixtures. Replace with three circuits of lighting: four 2-lamp asymmetrical 2' long T5 fluorescent uplights, one 35Par16CURIO-PQ lamp in center downlight section accessible by star-pattern grille, and (12) 35Par16CURIO-PQ lamps held in ring above glass lens, aimed through existing glass apertures. Manufacturer shall remove all metal dents and ripples, repair damaged parts, and reconfigure internal lighting products. Manufacturer shall repaint saucer to match original paint finish. Saucer is currently suspended from four mounting points. Overall suspension length to be modified as shown above right. Manufacturer shall investigate covering top of saucer so that it is easier to clean fixture when necessary, and so that the fixture does not collect debris. Lamps must still be easily maintained. Fixture to be located where dimming is required. Lamp center socket above snowflake grille with 75W halogen Par30 lamp. See detail.

Approved manufacturer:

- Klemm Reflector. Contact Mike O'Hearn at Total Lighting Concepts (518) 453.9445 for information.

Lamps:

(8) F24T5HO/835 lamps

(13) 35Par16CURIO-PQ or Q21EMR16/C/FL25/H/FL35

Date: 05/20/08

Scale: Varies

LD4.125

Sheet No.

Upper PAC Lobby

Notes:

University at Albany

Lighting Masterplan

Albany, New York

Naomi Miller Lighting Design,LLC
46 23rd Street
Troy, NY 12180-1913 USA
518.272.2745 voice
info@nmlightingdesign.com;
www.nmlightingdesign.com
Naomi Johnson Miller, FIES, FIALD, LC

4.1.2.6 PERFORMING ARTS CENTER

4.1.2.6.1 Existing Conditions

The Performing Arts Center is a collection of theatre-related spaces, from Black Box Theatre to Large Performance Auditorium, Dressing Rooms to Scenery Workshop, threaded together with confusing and gloomy corridors. The theatrical lighting and controls seem inadequate for university-level performances, and the house lighting is even poorer. Dimming is essential to creating moods, focusing attention, and helping audiences adapt to the low light levels of theatre. So many PAC fixtures have been retrofitted with undimmable screwbase compact fluorescent lamps, or even metal halide fixtures with color and restrike issues, that the entire Performing Arts Center works awkwardly.

The PAC has been modified, partially remodeled, retrofitted, and relamped so many times that the current lamp list is long and full of oddball lamps that are difficult for maintenance people to identify, stock, and use properly.

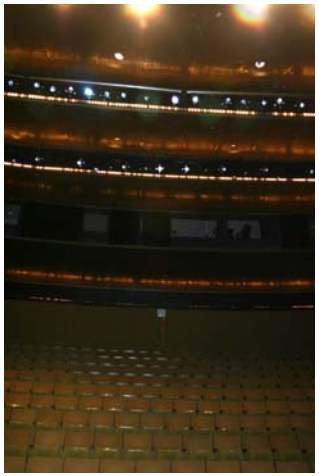

Figure 69 - Large Auditorium in PAC

Figure 70 - Round theatre in PAC

Figure 71 - PAC corridor

Figure 72 - PAC scenery workshop

4.1.2.6.2 Recommendations for Performing Arts Center

The facility needs to be rethought and reworked with the help of an architect sensitive to historical preservation as well as theatrical requirements. A lighting designer with these same qualities can recommend architectural fluorescent and halogen systems that are easily dimmed, energy-efficient, appropriate and consistent in color, much easier to maintain, and most importantly, make the theatre spaces look more attractive while helping transition the audience into viewing modes that make them more receptive to the arts event.

As an example, one complaint from the PAC manager is that unfamiliar maintenance staff may relamp recessed incandescent downlights in theatre spaces with undimmable compact fluorescent, making it impossible to dim house lights before a performance. In those locations, it may make sense to change the fixture to a halogen downlight that uses MR16 lamp. These are long-life halogens that use a bi-pin base, and so cannot be accidently relamped with compact fluorescent.

Dimming system and lamp operation noise, acoustics, energy use, safety, and access are issues that need to be addressed in the facility lighting redesign.

4.1.2.6.3 Large Auditorium in PAC

4.1.2.7 DINING CENTER – CAMPUS CENTER

4.1.2.7.1 Existing Conditions

This is a classic example of the Stone architecture, with graceful arched window details and curved column capitals.8' diameter saucer lights visually dominate the dining room. The lower level has one 7'-8" saucer per 20' x 20' bay. Unfortunately they hang 6' above the floor, so tall students can hit their heads on them. They receive a lot of accidental abuse and catch a great deal of food particles and dust. They are difficult to swing aside to allow maintenance people to clean air diffusers above them. The light level from them is too low and so diffuse that it adds little pizzazz to the space. The Dining Center management would like to see additional lighting at the entry to the serving line, and also dedicated lighting over serving counters set up at the edge of the dining room.

Figure 73 - Campus Center Dining Center

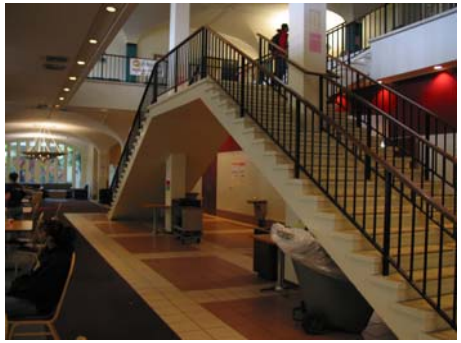

Figure 74 - Dining Center Stairs and Serving Line Entry

4.1.2.7.2 Recommendations

This is one place where the community needs to discuss the appropriateness of the saucer lights, because they are functionally problematic. They are difficult to clean, and they highlight mechanical diffusers that are not very attractive. Student dining spaces may need to feel younger, fresher, edgier than the architecturally "historic" saucers can produce. It may be very appropriate for a faculty dining room to have a lighting system that reflects the campus' architectural heritage.

If the community feels the Dining Center should retain the historic lighting and dining room design, then follow the attached lighting plan and product recommendations. This includes refurbishing the saucers for better performance, shortening the suspension so that they hang a foot higher, putting a continuous wash of light along the core wall, using a fluorescent wall slot, and adding some whimsical wall sconces to the entry to the serving line.

If the community decides the Dining Center should have a more contemporary feel, then an interior architect can suggest changes in layout and finishes and character that will inform the lighting design. If this is the path chosen, it is still important to consider the practical issues: cleaning, ease of maintenance, energy efficiency, durable materials, and some control flexibility for occasional social functions.
ADD SPECIFIC RECOMMENDATIONS SINCE THIS WILL REMAIN WITH SAUCERS.

4.1.2.8 GYMNASIUM (BASKETBALL)

4.1.2.8.1 Existing conditions

It is important in a gymnasium to have fixtures that can resist impact from a ball, fixtures that direct some light upward onto the ceiling so that the fixture contrast against its background surface is reduced, and that has a lens that diffuses the glare of the bright bare HID lamp over a larger surface. The gymnasium below uses old-technology probe-start metal halide lamps in prismatic glass reflector hanging pendants. The lamp wattage is probably 400W. The lamps may be old, which is why the light levels are low. (17 footcandles horizontal was measured, and for Class III play, the IESNA recommends 30 footcandles horizontal.)

Figure 75 - Gymnasium

4.1.2.8.2 Recommendation for Gymnasium

Note: the following recommendations are predicated on the existing fixtures being 400W metal halide units.

Least cost upgrade: In order to increase light levels, improve lumen maintenance (i.e. keeping light levels high over time), get consistent and good color, and energy savings, the following changes are recommended for existing **Fixture Type Q5**:

- Reconfigure existing metal halide fixtures with new pulse-rated socket, "potted" magnetic ballast with ignitor, and new Pulse-Start metal halide lamp. Use the same wattage lamp as is currently installed, but use a phosphor-coated lamp to reduce glare.
- Put alternating rows of fixtures on alternate circuits, so that for casual play, light levels can be switched to the low setting with 50% of the lights off. The switch should be located in a place where only the coaches or facility manager can use them.
- No energy savings result from this approach except when light levels are dropped for casual play, but the light levels will improve and remain higher longer because it is a better quality lamp/ballast system.

Better upgrade: Another option for lighting in gymnasiums is using linear fluorescent fixtures with four to six T5 High Output lamps in cross-section. Fluorescent lamps do not have a restrike time, so they can be switched instantly on and off for different light levels. Lamp life is longer than metal halide, but more lamps are needed per fixture. Here is the alternate approach using **Fixture Type Q6**:

- The fluorescent fixtures would replace the existing fixtures one-for-one, but mount them perpendicular to the length of the beams, as shown in plan.
- The fixtures are switched with alternating lamps on a second control circuit, so that light levels can be dropped when there is a more casual level of play, or when daylight is plentiful. The lamps will restrike instantly, and will not require 10 minutes to warm up as metal halide did.
- Light levels over time will be equivalent to existing levels, but there will be a 20% reduction in energy use, and potentially more if lighting is used at lower levels for casual play.

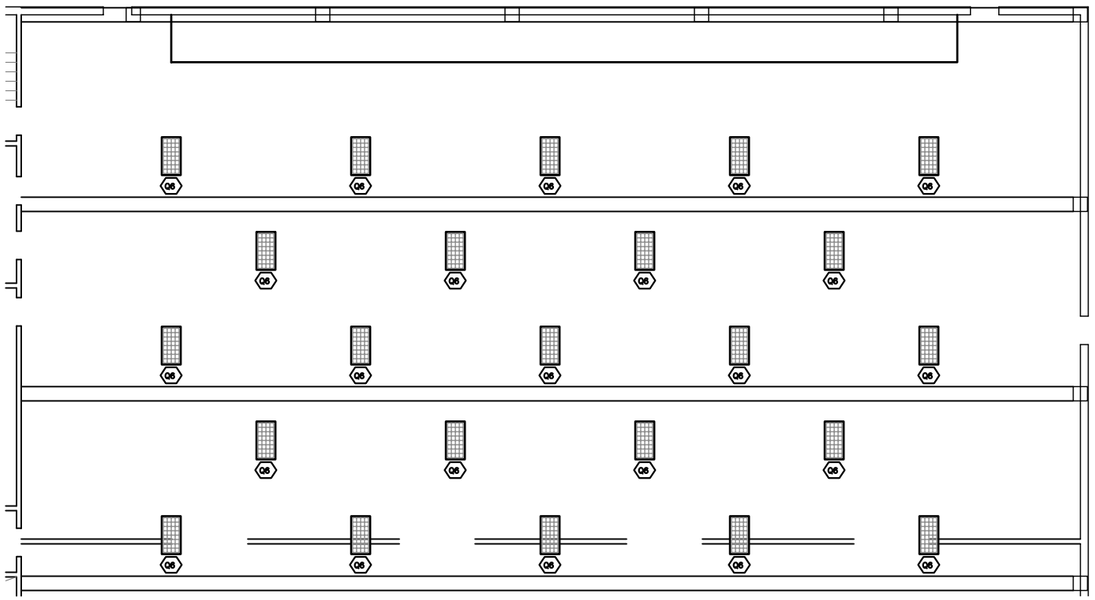

1 Gymnasium Lighting Plan - Partial

1/16"=1'-0"

Note: High-Impact Lens instead of Louver

2 Fixture Q6

3"=1'-0"

3 Gymnasium

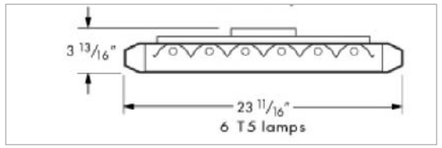

4 Fixture Type Q6

1"=1'-0"

Type Q6 Fluorescent "High-Bay" Pendant
Performance Specification:
2' x 4', 6-lamp T5HO fluorescent fixture suspended from ceiling approximately 4' overall (but no lower than 12" above the bottom of the beams) in Gymnasium. Run fixtures perpendicular to length of beams. Replace existing metal halide fixtures one-for-one. Fixture delivers upward and downward light, with housing and impact-resistant acrylic lens on bottom side. Minimum optical efficiency of 80%, with less than 15% of lumens emitted between 60 and 90 degrees from nadir. Integral programmed-start electronic ballasts. Alternate lamps switched on separate circuits for two-level switching. White painted finish. Aircraft cable suspension, with guy wires to stabilize fixture.

Approved Product: H.E. Williams GLA-4-654TH-Hi impact acrylic-UP4-Volt

Lamps:
(6) F54T5HO/835 lamps

Date: 05/20/08
Scale: Varies
LD4.128-B
Sheet No.

Gymnasium
Notes:

University at Albany
Lighting Masterplan
Albany, New York

Naomi Miller Lighting Design, LLC
46 23rd Street
Troy, NY 12180-1915 USA
518.272.2745 voice; 518.272.2953 fax
info@nmlightingdesign.com;
www.nmlightingdesign.com
Naomi Johnson Miller, FIES, FIALD, LC

4.1.2.9 ADMINISTRATIVE OFFICES - STUDENT FINANCIAL SERVICES

4.1.2.9.1 Existing Conditions

Student Financial Services offices are located in Campus Center, on floors with graceful columns and sculptural ceilings. Office workstations are laid out with a variety of panel heights. (Tall workstation panels make an office inefficient with light because the panels absorb a great deal of light before it reaches the desktop.) The original saucer lights were removed decades ago, and replaced with 400W metal halide "hockey puck" indirect fixtures. They use old technology metal halide lamps, which degrade in light output quickly, and shift color so that the ceiling is a hodge-podge of pastel colors. Measured light levels at desk level in the space ranged from 2-5 footcandles, much lower than the 30-50 footcandle target normally recommended for computer-intensive office. As a result, the space looks gloomy and unattractive.

Figure 76 - Student Financial Services Offices

4.1.2.9.2 Recommendations for Administrative Offices

The sculptural ceilings are architecturally vital, and it is necessary to find a lighting system that will reinforce the visual qualities, while delivering 30-50 footcandles of light in the workstations with light fixtures that do not interfere with computer screen viewing.

The columns are on a 20' x 20' grid, and the flat sections of the ceiling produce a "plus" pattern. The recommended solution is a suspended direct/indirect lighting system with two T8 lamps in cross-section, laid out in a "plus" pattern, one pattern with 8' long legs per column bay (**Fixture Type L1**). The lighting fixtures are rectangular in shape to mimic the box-like fluorescent pendants historically installed for classrooms. Because of

private offices and full-height walls, it will be necessary to lay out this idea using L-configurations (**Fixture Type L2**), straight runs (**Fixture Type L3**), T-shaped configurations (**Fixture Type L4**), as well as 8' and 4' long wall-mounted versions (**Fixture Types L5 and L6**, respectively).

Figure 77 - Lighting upgrade to Student Financial Services, showing "plus" pattern of linear fluorescent fixtures

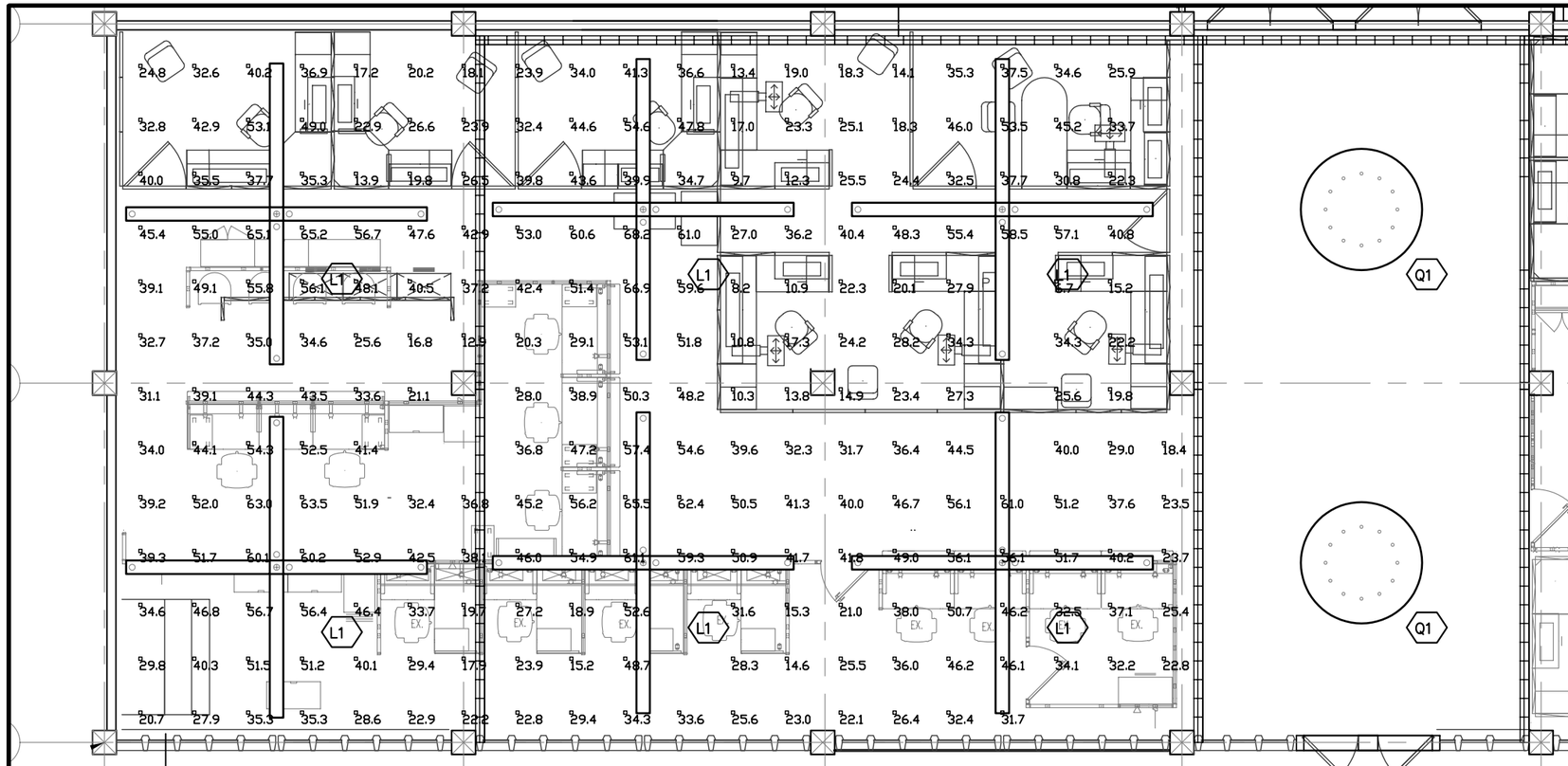

1 Open Office Lighting Calculation

1/8"=1'-0"

2 Existing Open Office

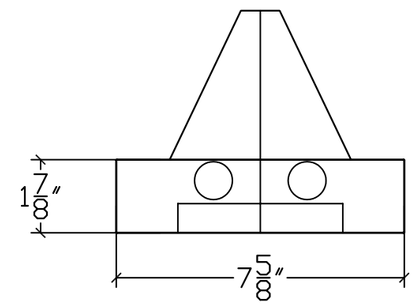

3 Fixture Type L1 Section

3"=1'-0"

Open plan office lighting

Performance specification: For Fixture Type L1

- Suspended linear fluorescent in "Plus" pattern. (4) 8' extruded aluminum indirect/direct pendants (2-lamps in cross section), all sharing special center connector. Special center connector provides normal and emergency/nightlight power. Open upward aperture, semi-specular baffle downward, with minimum luminaire efficiency of 85%.
- Integral electronic high-efficiency instant-start ballast with Normal Ballast Factor (BF=0.88), Advance Optanium or equivalent.Provide two circuits in some units, one for normal, second for nightlight/emergency power. Where indicated provide Integral emergency ballast that provides 1350 initial lumens from two lamps (810 after 90 minutes), Bodine B50 or equivalent. Emergency ballast to fit completely in pendant.
- Nominal housing dimensions of 9" wide x 3" tall. Aircraft cable suspension, white cord feed. White painted housing finish.
- Min 1-year warrenty on fixture, 3-year warranty on ballast.

Approved products:

- Finelite "Series 16" S16-SSL-Config-2T8-DC-91W-Open-Volt-MOD-AC-FE-Optanium
- Litecontrol "LC-82" P-ID-822-length-T8-PBSSHP-CWM-Tandem-wiring-HI Effic Electronic-2CWQ with "X"-connector
- Lightolier "Energos" EG2-2-BK-P-Config-Volt-W-MOD "PLUS" CONNECTOR

Lamps: (2) F32T8/835/XPS by GE, Philips, Sylvania per 4' length of fixture

Locating instructions

- Remove existing linear pendants or "hockey puck" fixtures
- Install "plus" configuration in center of the vault
- Where configuration will not work, locate either wall bracket or suspended linear fluorescent versions of pendants from same family as the configuration

Target Illuminance:

- 35-40 fc avg.maintained, assuming ballast factor of 0.87 and light loss factors (LLF) of 0.75 (excl. BF)

Target Power Density:

- 1.5 W/square foot allowed per New York Energy Code
- Installed power density is approximately 1.1 W/square foot with "plus" configuration in center of vault

Date: 04/24/08

Scale: Varies

LD4.129-A

Sheet No.

Open Office

Notes:

University at Albany

Lighting Masterplan

Albany, New York

Naomi Miller Lighting Design, LLC
46 23rd Street
Troy, NY 12180-1913 USA
518.272.2745 voice
info@nmlightingdesign.com;
www.nmlightingdesign.com

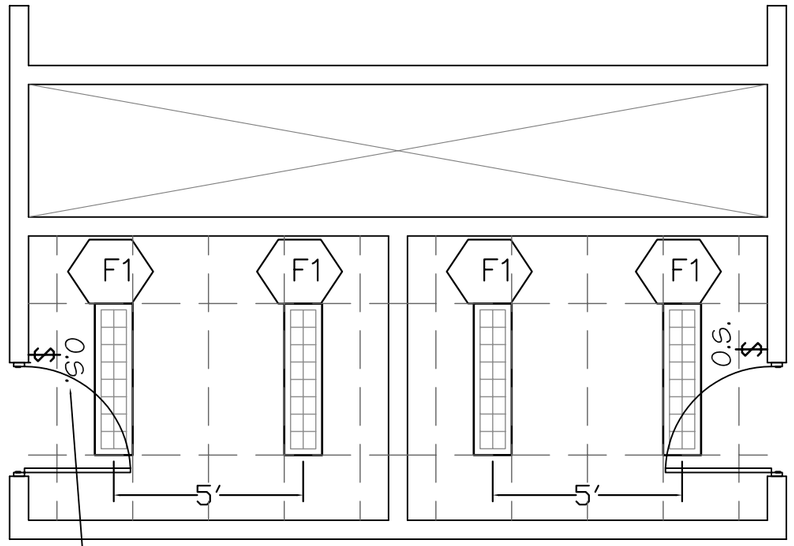

Passive infrared (PIR) Occupancy Sensor such as
Watt Stopper WA-300
(Control uplight and downlight with separate switches)

1 Administrative Office Lighting Plan

1/4"=1'-0"

3 Administrative Office

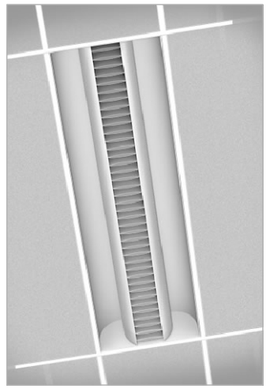

4 Fixture Type F1

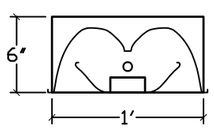

5 Fixture Type F1 Section

1"=1'-0"

Administrative Office Lighting

Performance specification: For Fixture Type F1

- Recessed 1'x4' fluorescent "direct/indirect" troffer with louvered downlight. One T8 fluorescent lamp in cross section. Integral programmed start electronic ballast, Universal B132PUNVHP-A or equivalent. Mounting will vary according to installation, so ceiling type in catalog number has been replaced with "CLG". Minimum 60% luminaire efficiency. Minimum one-year warranty on luminaire, 3-year warranty on ballast.

Approved products:

- Columbia STRL14-132-CLG-WCBMPO-EB-Prostart-Volt
- or Linear Lighting CBL14-D1ET8-PRD/PXL-CLG-BW-PSB10-4
- or Lightolier PPS1-CLG-6WW132-Volt-Prostart

Lamps: (1) F32T8/835/XPS by GE, Philips, Sylvania per 1x4 fixture

Target Illuminance:

- 35-50 fc ambient (average, maintained), Assuming ballast factor of 0.87 and light loss factor (LLF) of 0.75 (incl. BF)

Target Power Density:

- 1.6 W/square foot allowed per New York Energy Code
- Actual power use 0.9 W/square foot as shown.

Switching:

- Uplight on one switch, downlight on second switch. Both switches controlled by dual-technology occupancy sensor located as directed by sensor manufacturer (Watt Stopper WA-300 or equivalent)

Date: 04/24/08
Scale: Varies
LD4.129-B
Sheet No.

Academic Office 1

Notes:

University at Albany
Lighting Masterplan
Albany, New York

Naomi Miller Lighting Design,LLC
46 23rd Street
Troy, NY 12180-1913 USA
518.272.2745 voice
info@nmlightingdesign.com;
www.nmlightingdesign.com
Naomi Johnson Miller, FIEs, FIALD, LC

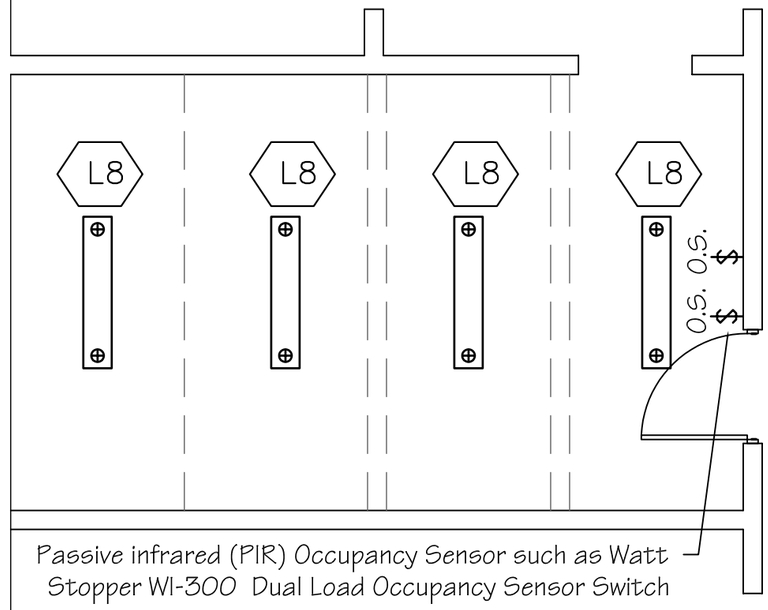

1 Academic Office 1 Lighting Plan

1/4"=1'-0"

3 Existing Academic Office1

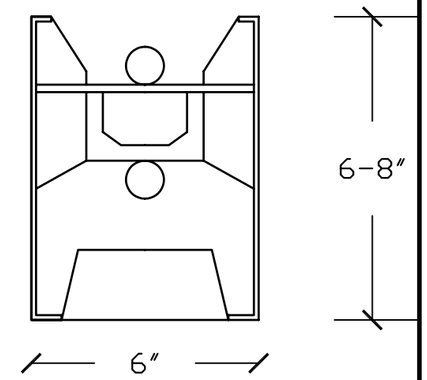

4 Fixture Type L8

3"=1'-0"

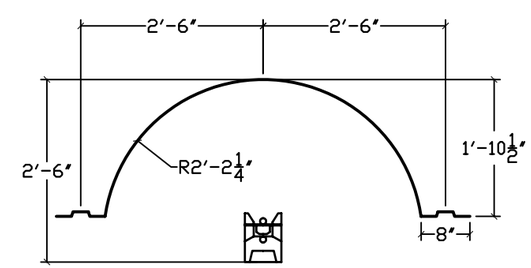

5 Fixture Type L8 Section

1/2"=1'-0"

Academic Office Lighting

Performance specification: For Fixture Type L8

- Suspended direct/indirect linear fixture with box shape, located primarily in office and classrooms with barrel vaults. Approximately 6" wide, 6 to 8" tall. Straight runs only. 4', 8', 12, or 16' runs as shown on plans. Two T8 lamps in cross-section with integral programmed start ballasts (Philips "Optanium" or equivalent.) Tandem-wiring for two-level switching, uplight separate from downlight. White painted housing finish. Semi-specular parabolic louver downward. Minimum luminaire efficiency of 65%. Aircraft cable suspension and flat end caps. Minimum one-year warranty on luminaire, 3 year warranty on ballast.

Approved products:

- Neoray 14DIP-1-1-T8-27-SC-Length-Volt-Prostart-S79
- or Prudential P-69-1T8/1T8-Length-Semispecular Parabolic Louver -TMW-D3-DC-Volt-CA48-X3-Prostart
- or Alera MS6-1U1D-T8-CM-48-LD-Prostart-Volt-Length-U/B

Lamps: (2) F32T8/835/XPS by GE, Philips, Sylvania per 4' length of fixture

Target Illuminance:

- 35-50 fc ambient (average, maintained), Assuming ballast factor of 0.87 and light loss factor (LLF) of 0.75 (incl. BF)

Target Power Density:

- 1.6 W/square foot allowed per New York Energy Code
- Actual power use 1.0 W/square foot as shown.

Switching:

- Uplight on one switch, downlight on second switch. Both switches controlled by dual-technology Occupancy Sensor located as directed by sensor manufacturer (Watt Stopper WI-300 or equivalent)

Date: 04/24/08

Scale: Varies

LD 4.129-C

Sheet No.

Academic Office 2

Notes:

University at Albany

Lighting Masterplan

Albany, New York

Naomi Miller Lighting Design,LLC
46 23rd Street,
Troy, NY 12180-1913 USA
518.272.2745 voice
info@nmlightingdesign.com;
www.nmlightingdesign.com
Naomi Johnson Miller, FIES, FIALD, LC

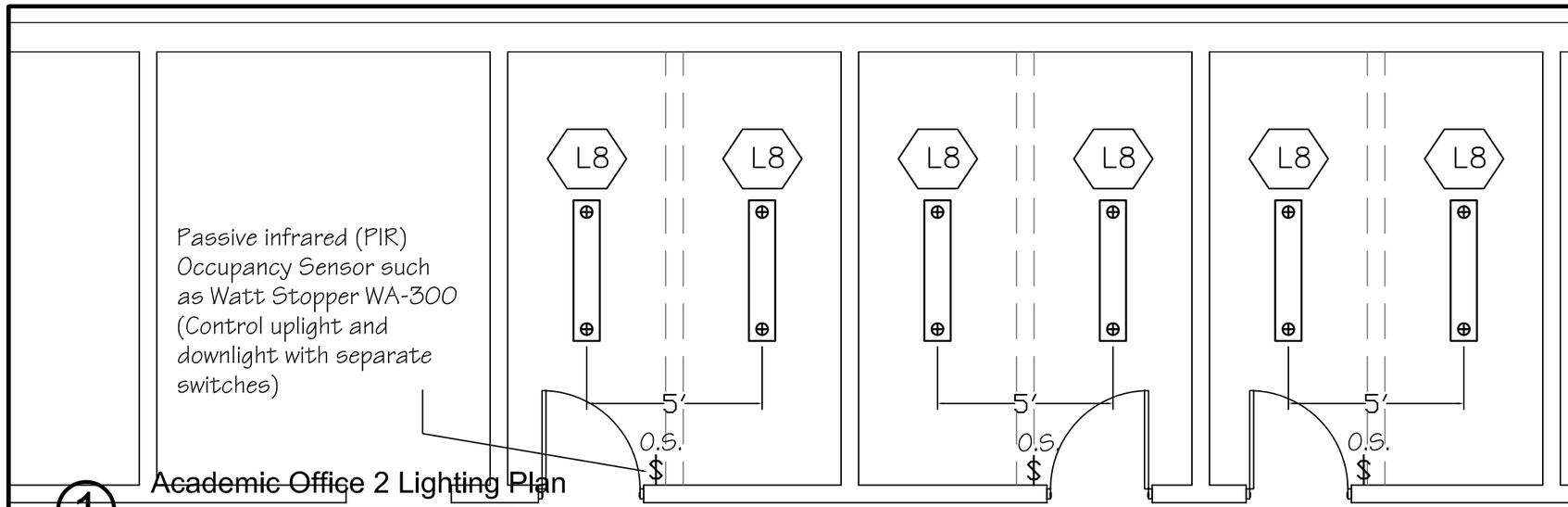

1 Academic Office 2 Lighting Plan

1/8"=1'-0"

3 Existing Academic Office2

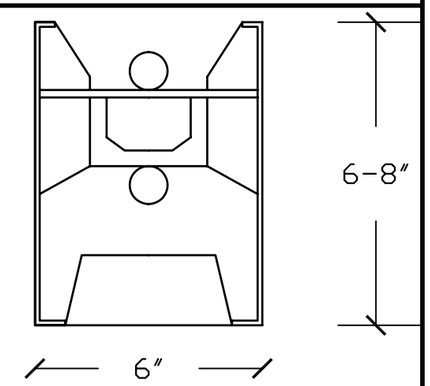

4 Fixture Type L8

3"=1'-0"

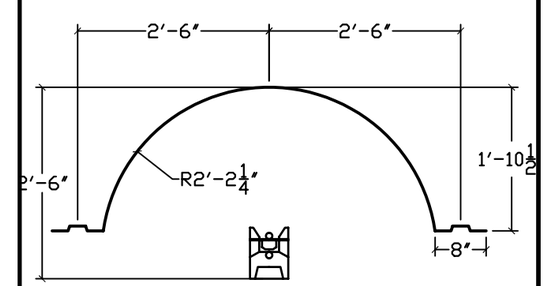

5 Fixture Type L8 Section

1/2"=1'-0"

Academic Office2 Lighting

Performance specification: For Fixture Type L8

- Suspended direct/indirect linear fixture with box shape, located primarily in office and classrooms with barrel vaults. Approximately 6" wide, 6 to 8" tall. Straight runs only. 4', 8', 12, or 16' runs as shown on plans. Two T8 lamps in cross-section with integral programmed start ballasts (Philips "Optanium" or equivalent.) Tandem-wiring for two-level switching, uplight separate from downlight. White painted housing finish. Semi-specular parabolic louver downward. Minimum luminaire efficiency of 65%. Aircraft cable suspension and flat end caps. Minimum one-year warranty on luminaire, 3 year warranty on ballast.

Approved products:

- Neoray 14DIP-1-1-T8-27-SC-Length-Volt-Prostart-S79
- or Prudential P-69-1T8/1T8-Length-Semispecular Parabolic Louver -TMW-D3-DC-Volt-CA48-X3-Prostart
- or Alera MS6-1U1D-T8-CM-48-LD-Prostart-Volt-Length-U/B

Lamps: (2) F32T8/835/XPS by GE, Philips, Sylvania per 4' length

Target Illuminance:

- 35-50 fc ambient (average, maintained), Assuming ballast factor of 0.87 and light loss factor (LLF) of 0.75 (incl. BF)

Target Power Density:

- 1.6 W/square foot allowed per New York Energy Code
- Actual power use 0.9 W/square foot as shown.

Switching:

- Uplight on one switch, downlight on second switch. Both switches controlled by dual-technology occupancy sensor located as directed by sensor manufacturer (Watt Stopper WA-300 or equivalent)

Date: 04/24/08

Scale: Varies

LD 4.129-D

Sheet No.

Academic Office 3

Notes:

University at Albany

Lighting Masterplan

Albany, New York

Naomi Miller Lighting Design,LLC
46 23rd Street
Troy, NY 12180-1913 USA
518.272.2745 voice
info@nmillerlightingdesign.com;
www.nmillerlightingdesign.com
Naomi Johnson Miller, FIES, FIALD, LC

4.1.2.10 ACADEMIC OFFICE 1

Existing Conditions

These 20' x 13' offices have exposed concrete barrel-vault ceilings, linear barrels running 5' on center. The existing lighting uses the same linear fluorescent fixtures used in the classrooms, with T12 HO lamps and magnetic ballasts. It delivers uplight and downlight. The original plastic egg-crate louver in the downward aperture has yellowed and cracked, and in most cases is missing altogether. The lighting system is effective at producing comfortable direct/indirect light, but the old lamp and ballast technology causes flicker, produces poor color rendering, cannot be switched to reduce electric light levels when daylight is plentiful, and uses twice the power currently allowed by the NYS energy code.

Figure 78 - Academic Office (showing barrel vault ceiling)

Recommendations – New Fixtures

Remove the existing 9' long linear steel fixtures and recycle. Reuse the existing feed locations (along with surface-mounted small-profile conduit) to power a 4' linear fluorescent fixture (**Fixture Type L8**) in each barrel vault. This new fixture reproduces the appearance of the original fixture, but because it uses efficient technologies, it uses approximately one-third the power. Fixtures in alternating barrel vaults should be switched together, with two switches at the door. This allows the occupant to reduce the light level to half maximum level when desired. Both groups of lights are controlled by Passive Infrared (PIR) wall switches at the door.

Recommendations – Retrofit of existing fixtures

The lowest cost approach to reducing the energy use and improving the lighting quality is to reuse the existing 6" x 6" cross-section fixture housings. Remove existing ballasts and sockets for single 8' long T12HO lamp. Replace with low-output electronic programmed-start ballast (Sylvania Low-Ballast-Factor Quicktronic Programmed-Start, or equivalent by Philips or Universal), two T8 4' lamps (one lamp in cross-section), four sockets, and two 4' long replacement semi-specular baffle sections (ALP XXX Series) to

fit existing fixture. Maintain occupancy sensor and switching as described under "New Fixtures", above.

4.1.2.11 Academic Office 2

Existing Conditions

These 10' x 13' offices have exposed concrete barrel-vault ceilings, linear barrels running 5' on center. The existing lighting uses the same linear fluorescent fixtures used in the classrooms, with T12 HO lamps and magnetic ballasts. It delivers uplight and downlight. The original plastic egg-crate louver in the downward aperture has yellowed and cracked, and in most cases is missing altogether. The lighting system is effective at producing comfortable direct/indirect light, but the old lamp and ballast technology causes flicker, produces poor color rendering, cannot be switched to reduce electric light levels when daylight is plentiful, and uses twice the power currently allowed by the NYS energy code.

Figure 79 - 10' x 13' Academic Office

Recommendations – New Fixtures

Remove the existing 9' long linear steel fixtures and recycle. Reuse the existing feed locations (along with surface-mounted small-profile conduit) to power a 4' linear fluorescent fixture (**Fixture Type L8**) in each barrel vault. This new fixture reproduces the appearance of the original fixture, but because it uses efficient technologies, it uses approximately one-third the power. The two 4' fixtures are controlled by Passive Infrared (PIR) wall switches at the door.

Recommendations – Retrofit of existing fixtures

The lowest cost approach to reducing the energy use and improving the lighting quality is to reuse the existing 6" x 6" cross-section fixture housings. Remove existing ballasts and sockets for single 8' long T12HO lamp. Replace with low-output electronic programmed-start ballast (Sylvania Low-Ballast-Factor Quicktronic Programmed-Start, or equivalent by Philips or Universal), two T8 4' lamps (one lamp in cross-section), four sockets, and two 4' long replacement semi-specular baffle sections (ALP XXX Series) to fit existing fixture. Maintain occupancy sensor and switching as described under "New Fixtures", above.

4.1.2.12 Academic (or Administrative) Office 3

Existing Conditions

These 10' x 8' offices have very low acoustical tile ceilings, and the plenums above them are reputed to be so full of pipes and wiring and ducts that there is no recessed depth available beyond where the existing recessed incandescent downlights are located. These original downlights do not deliver enough uniform lighting in the office, especially if retrofitted with compact fluorescent lamps.

Figure 80 - Small academic office with acoustical tile ceiling

Recommendations – New Fixtures

Remove the existing recessed downlights. Locate one 4' long ceiling-mounted fixture (**Fixture Type L???**) in the center of the ceiling, parallel with the long wall. This fixture delivers some light upward onto the ceiling, while delivering low-brightness downward light onto work surfaces. Install one Passive Infrared (PIR) wall switch at the door.

4.1.2.13 PODIUM LIBRARY

Existing Conditions and Recommendations:

The original "Palm Lighting" is used throughout the library and it is important to preserve this signature appearance in this prominent building. In the 1990s, the T12 (1.5" diameter) fluorescent lamps and older ballasts were replaced with T8 fluorescent lamps and electronic ballasts. Diffusing lenses were replaced with K12 prismatic acrylic lenses attached with clips. This technology upgrade has held up well, and should be maintained until there is a significant improvement in technology to warrant another upgrade. As lamps fail, they should be replaced with the premium T8 lamps, also called "Super T8s", because their average life is 24,000 to 30,000 hours. This will stretch the time between needed lamp replacements. As ballasts fail, they can be replaced with the highest efficiency programmed-start ballasts (Philips "Optanium" or equivalent by Universal or OsramSylvania). This prolongs lamp life as well as reducing energy use.

Figure 81 – Palm Lighting in Library

4.1.2.14 Campus Center Ballroom

4.1.2.14.1 Existing Conditions

The Ballroom is an architecturally stunning space, with tall graceful columns, saucer lights in line with the columns wrapping around the room, and a three-dimensional ceiling that mimics the perforated overhangs of the podium facades. It is used for formal dinners, dances, celebrations, awards ceremonies, and more informal events as well. The tall windows bring in daylighting, but sometimes the windows are too bright. Because there may be dance events or projector presentations, blocking off daylighting is often needed, and dimming of lights would be advantageous. The lighting now comes from the original saucers, so there is fluorescent uplighting for ambient light, and dimmable downlight only in the center snowflake of the saucer. There are two adjustable accent lights that have been mounted to a pipe in two of the square holes of the ceiling, aimed at one dais location for focal lighting.

A tall dark fabric curtain has been hung along one end of the room, to create a visually separate cloakroom, and also to provide a dark backdrop for a dais or head table at some events. Four of the saucer lights have been removed in order to accommodate this curtain structure.

Figure 82 - Campus Center Ballroom

4.1.2.14.2 Recommendations

Because flexibility for different events is key, and because this is a prominent formal campus space for publicized events, we recommend the following:

- Retain the existing saucer lights because they are symbolic of the campus history, however they should be refurbished to use newer lamp technologies. See **Fixture Type Q4.** This includes halogen lamping for the center snowflake grille and perimeter holes, that is powered by a separate circuit from the fluorescent and is easily dimmed for evening and party-like events.
- Add 8' fluorescent uplight fixtures to the edges of the large square coffers in the center of the hall. These are asymmetrical and will throw light onto the upper ceiling. **Fixture Type L10**.
- Install a two-circuit track above the row of apertures in each coffered ceiling detail, as shown in attached drawing. The track faces the floor so that small track heads can be inserted into the track through the narrow apertures. Each fixture uses a long-life halogen MR16 lamp (6000 hours average). This circuit of lighting will provide concealed downlighting for center tables or dance floor. **Fixture Type T1.**
- The second track circuit is used for a pair of Par38 halogen track heads, which are used for highlighting a speaker, dais, or head table. These fixtures can be easily reached and moved by the staff according to the function or event. **Fixture Type T1**.
- The Ballroom needs to have an improved architectural control system. This would be a simple system with six control zones, each requiring separate wiring. The master controller would be a Lutron "Grafik Eye" 3106 system or equivalent by Crestron, with high-power panels to dim loads that exceed 800 Watts on several of the control channels. The master controller allows the Ballroom Manager to set up a series of "scenes" of lighting that are suitable for different functions. A remote scene selector would be located at the doors, and would allow users to select lighting scenes appropriate for the individual function.

Figure 83 - Ballroom ceiling coffer

Figure 84 - Ballroom coffer detail

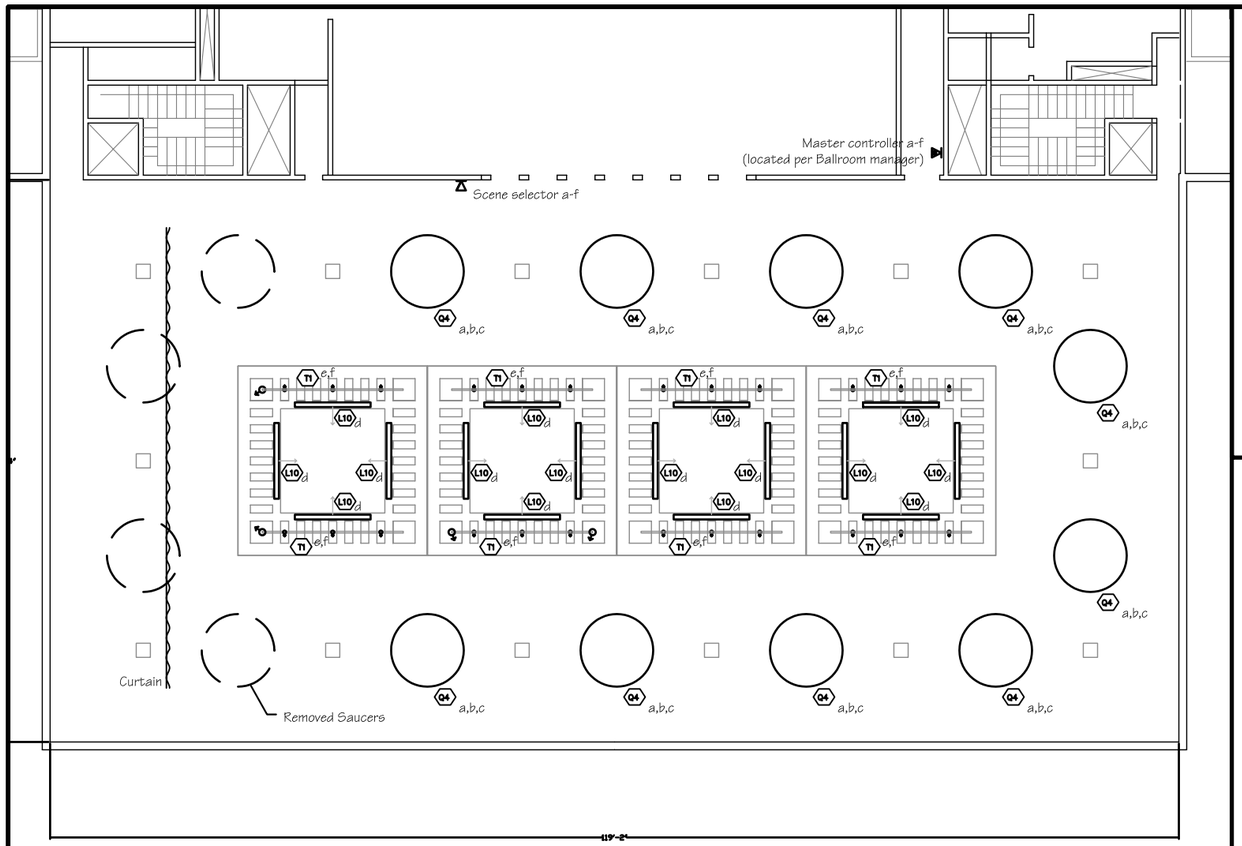

1 Campus Center Ballroom Lighting Plan

1/16"=1'-0"

2 Existing Ballroom Lighting

3 Existing Saucer

Ballroom Dimming Schedule:
a - Fl uplt from saucer 62x40 = 2480W : Non-dim
b - Inc. dnlt from saucer 10x35W = 350W : Dim
c - Small aperture dnlt saucer 120x75W = 4200W : Dim
d - Fl uplt in coves 16X62W = 992W : Non-dim
e - MR16 accent ltg downward = 1500W
f - Par 38 focal light = 1500W
Total 11,022W

Approved P roducts
- Lutron 3106 Series with remote HP.6 high power panels
- or equivalent by Crestron or ETC.

Q4 Campus Center Ballroom Lighting : Saucers
Performance specification:
Existing "saucer light", to be removed and renovated at factory. Saucer is approximately 7'-8" in diameter, made of spun aluminum, with twelve 2" diameter glass apertures for downlight, and one central cavity for downlight accessible from removable grille. Manufacturer to renovate saucer, removing existing wiring and internal fixtures. Replace with three circuits of lighting: four 2-lamp asymmetrical 2' long T5 fluorescent uplights, one 35W medium base halogen lamp in center downlight section accessible by star-pattern grille, and (12) 35W medium base halogen lamps held in ring above glass lens, aimed through existing glass apertures.
Manufacturer shall remove all metal dents and ripples, repair damaged parts, and reconfigure internal lighting products. Manufacturer shall repaint saucer to match original paint finish. Saucer is currently suspended from four mounting points. Overall suspension length to be reduced 12" so that saucer hangs 12" higher above floor. Manufacturer shall investigate covering top of saucer so that it is easier to clean fixture when necessary, and so that the fixture does not collect debris. Lamps must still be easily maintained. See detail.

Approved Manufacturers:
- Klemm Reflector "University at Albany Saucer Pendant". Contact Mike O'Hearn at 518.453.9445 (Total Lighting Concepts Albany) for information.

Lamps:
(13) 35Par16CURIO-PQ or 21EMR16/C/FL25/H/F
(8) F24T5HO/835 lamps

Date: 05/20/08
Scale: Varies
LD4.1211-A
Sheet No.

Campus Center Ballroom

Notes:
Dimming schedule,
Fixture Type Q4

University at Albany
Lighting Masterplan
Albany, New York

Naomi Miller Lighting Design,LLC
46 23rd Street
Troy, NY 12180-1913 USA
518.272.2745 voice
info@nmlightingdesign.com;
www.nmlightingdesign.com
Naomi Johnson Miller, FIES, FIALD, LC

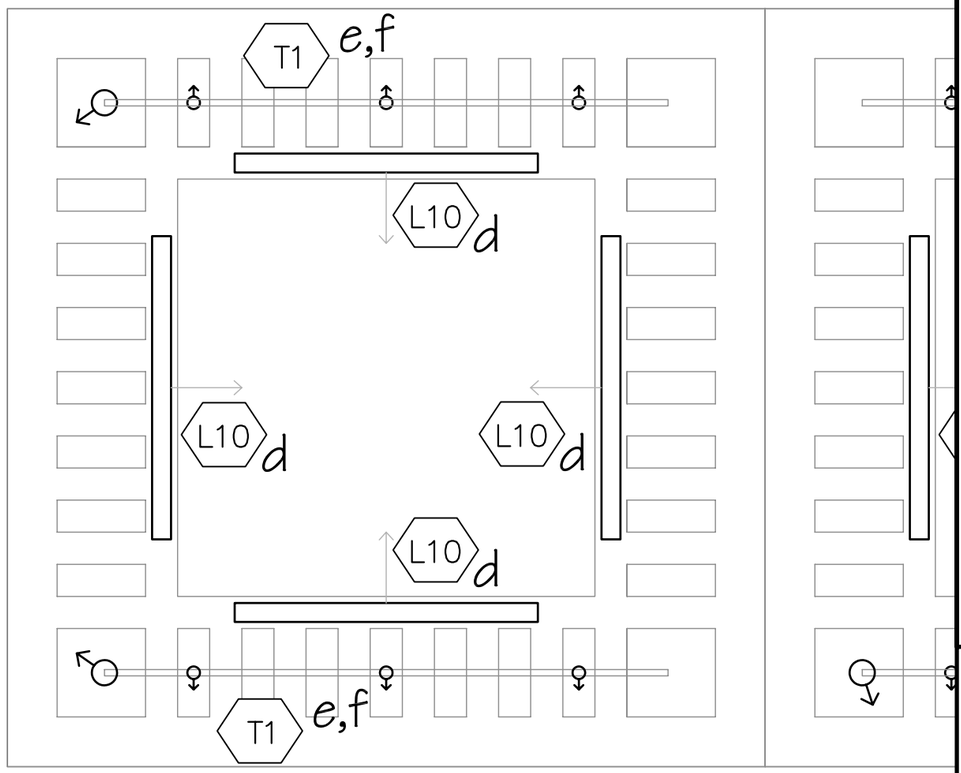

1 Campus Center Ballroom Lighting Plan : L10, T1

1/4"=1'-0"

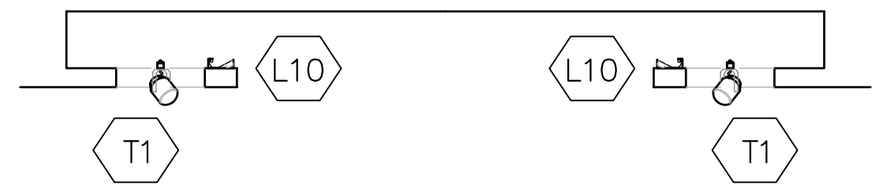

2 Campus Center Ballroom Lighting Section : L10, T1

1/4"=1'-0"

L10 Campus Center Ballroom Lighting : Cove lighting
Performance specification:
8' long fluorescent cove uplight with asymmetrical distribution for Ball Room. One T8 lamp in cross-section, and integral programmed start electronic ballast. Steel housing, painted white, mounted on concrete "shelf" at edge of decorative ceiling detail. See detail. Housing 8" wide x 3" tall, maximum. Main beam of light aimed toward center of coffer. Minimum fixture efficiency of 63%.

Approved Products:
- Cooper Neoray 74-IC-1T8-8'-Volt-EB-ProgStart-SI
- Or equivalent by Litecontrol or Lightolier

Lamps:
(2) F32T8/XLS/835 per 8' length

T1 Campus Center Ballroom Lighting : Track
Performance specification:
20' long, 2ckt track, black finish, for mounting above slots in decorative ceiling coffer of Ballroom. See detail. Each 20' long track will accommodate three low-voltage track heads (MR16, with integral magnetic transformer) in 1st, 4th, and 7th slots, aimed downward. In square slots, the track will accommodate up to two halogen Par38 track heads, yoke-mounted with lockable aiming, for aiming focal lighting at the dais. Because the dais can move according to event needs, the track heads can be relocated to a different slot location. Track contains two neutrals for separate dimming of circuits. Both track fixture types shall accept deep cross blade louvers or honeycomb louvers for shielding glare.

Approved Manufacturers:
- Lightolier "Prospec" track and heads. System count:

(24) MR16 track heads, Lightolier 26016MBBK
(8) Par38 track heads, Lightolier 26238BK
(8) 20' tracks, surface-mount 26013BK series with connectors, feeds, and gizmos necessary for a complete system.
- Or equivalent by Edison Price or Lighting Services Inc.

Lamps:
(18) Q50MR16/C/FL40 lamps
(8) 100Par38/HIR/FL40 lamps

Date: 05/20/08
Scale: Varies
LD4.1211-B
Sheet No.

Campus Center Ballroom
Notes:
Fixture Type L10, T1

University at Albany
Lighting Masterplan
Albany, New York

Naomi Miller Lighting Design, LLC
46 23rd Street
Troy, NY 12180-1913 USA
518.272.2745 voice
info@nmlightingdesign.com;
www.nmlightingdesign.com
Naomi Johnson Miller; FIES, FIALD, LC

4.1.2.15 Campus Center Extension Food Court

4.1.2.15.1 Existing Conditions

This area has several fast-food restaurant counters, and is frequented by students and staff. The space is fairly bland, with square-aperture metal halide downlights recessed in a linear aluminum ceiling system. The aluminum ceiling strips have sustained damage over the years, which is visible when bright windows are reflected in the surface. The space looks gloomy and uninviting, chiefly because there is little light falling on walls or column faces.

Figure 85 - Campus Center Food Court

4.1.2.15.2 Recommendations for Food Court

The existing metal halide downlights cannot be modified or replaced to improve the appearance of the space. Instead, consider augmenting the existing downlights with

- whimsical wall sconces along soffits and upper wall surfaces in a rhythm that creates visual interest, and/or
- wall washing
- recessed downlights with decorative colored accent trims
- LED strips that snake along the ceiling, etc.

Any of these would enliven the space with little wattage, but it is necessary to coordinate this with any interior architecture and finish changes.

4.1.3 TYPICAL QUAD DORMITORY SPACES

4.1.3.1 QUAD DORM ROOM

4.1.3.1.1 Existing Conditions

Original student dormitory rooms provided no lighting for students, expecting the students to furnish the room with portable lamps from home. The fixtures students bring use incandescent lamps almost exclusively, which adds to the campus electrical load.

Some dormitory rooms have been remodeled with a single fluorescent fixture, ceiling mounted at one end of the room. This provides uneven lighting in the room, so it must be supplemented with portable task lighting.

Ceilings are concrete with no recess depth, so all lighting must be installed with exposed wiremold-type metal conduit.

Figure 86 - Typical student dormitory room showing incandescent fixtures provided by students

Figure 87 - Remodeled dormitory with ceiling-mounted fixture at wall

4.1.3.1.2 Recommendations

Remove the existing fluorescent at the room's edge. Locate the replacement ceiling-mounted fluorescent fixture at the center of the ceiling, between and parallel to the normal twin bed locations in a double room. (See plan for similar location in a single room.) Power with surface-mounted conduit, painted to match the ceiling, and ensure there are two switches located at the entrance for two-level switching.

This **Fixture Type C1**, although resistant to student abuse, is more attractive than the existing fluorescent fixture. It contains two ballasts, so the student is able to switch it for low or high light level. When there is some daylight available, students will learn to save energy by switching on only half the lamps. The lower light level will also help make laptop screens more visible.

Figure 88 - One of three fixtures recommended for dorm rooms (ceiling mounted, not pendant-mounted) as Fixture Type C1.

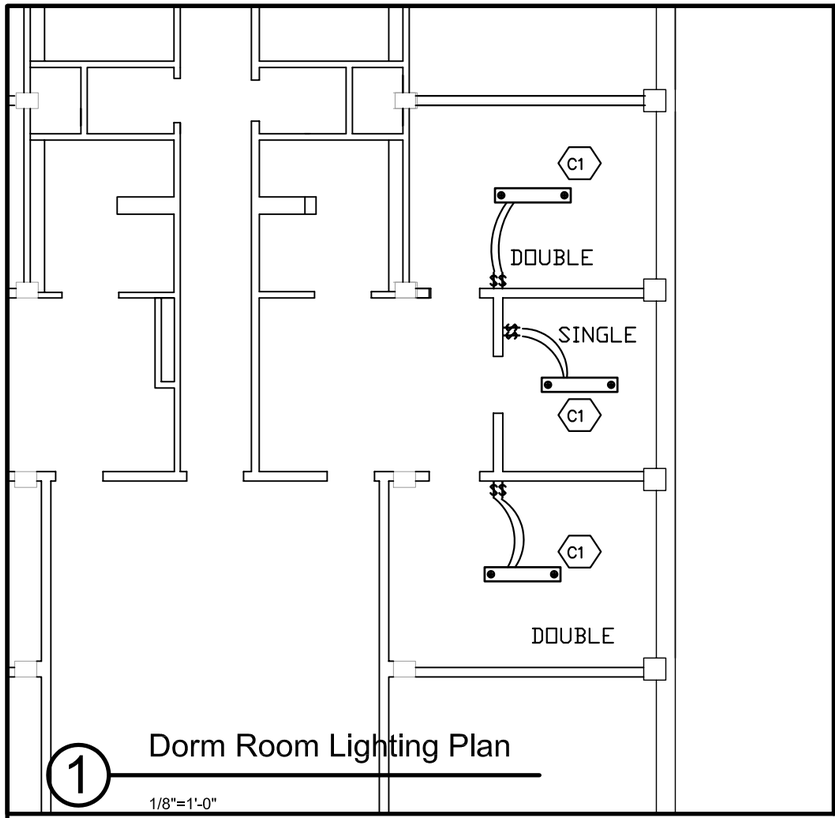

1 Dorm Room Lighting Plan

1/8"=1'-0"

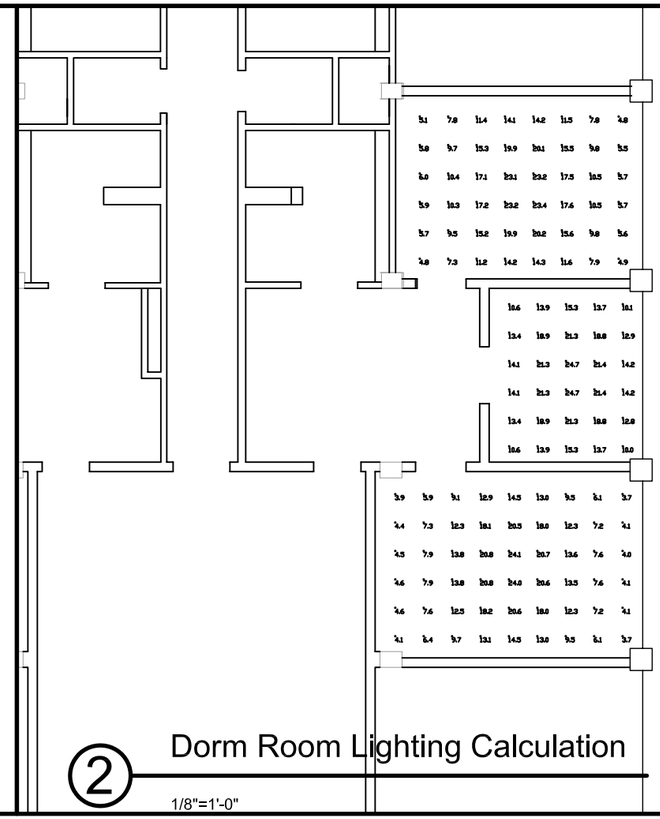

2 Dorm Room Lighting Calculation

1/8"=1'-0"

3 Existing Dorm Room

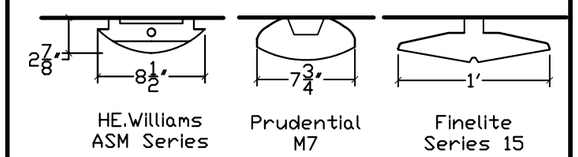

5 Fixture Sections

1"=1'-0"

Dorm room lighting

Performance specification: for FixtureType C1

- Surface-mounted or linear fluorescent pendant with either louver or perforated metal for glare shielding and some uplight emitted from the fixture.
- Maximum nominal dimensions of 15" wide x 4' long x depth of 6".
- Provide two integral electronic programmed-rapid start (T8 BF of 0.87 only) ballasts for 2-circuit switching.
- Minimum fixture efficiency of 75%.
- Minimum one-year warranty on luminaire, 3 year warranty on ballast.
- Voltage as specified by University at Albany.

Approved products:

- Prudential M7-2T8-04'-RBL-OL-TMW-D9-DC-SUR-X3
- Finelite S15-4'-2T8-DC-Volt-SS
- H.E.Williams ASM Series

Lamps:

- (2) F32T8/835/XPS

Locating instructions

- Remove existing wall or ceiling-mounted fixture.
- Provide surface-mounted conduit painted to match ceiling.
- Locate fixture in the center of the room perpendicular to the major glazing wall.

Target Illuminance:

- 10-20 fc maintained on the workplane (2.5' AFF) depending on the room geometry and room size, assuming ballast factor of 0.87 (T8) and light loss factor (LLF) of 0.75 excl.BF

Target Power Density:

- Not applicable per New York Energy Code
- Approximately 0.4-0.86 W/square foot depending on the room geometry and room size

Date: 05/20/08

Scale: Varies

LD4.131

Sheet No.

Quad Dormitory Rooms

Notes:

University at Albany

Lighting Masterplan

Albany, New York

Naomi Miller Lighting Design, LLC
46 23rd Street
Troy, NY 12180-1913 USA
518.272.2745 voice
info@nmlightingdesign.com;
www.nmlightingdesign.com
Naomi Johnson Miller, FIES, FIALD, LC

4.1.3.2 QUAD DORM SUITE

4.1.3.2.1 Existing Conditions

Suites have several bedrooms, hallways, and bathroom. For energy savings, switching from incandescent fixtures to permanent fluorescent or LED fixtures would help reduce power use in the Suites. Bathrooms have a utilitarian fluorescent fixture mounted above the vanity mirror. Whether these lamps are T12 or more efficient T8 lamps is unknown.

4.1.3.2.2 Recommendations for Quad Dorm Suite

The bedrooms should follow the recommendations for Dorm Rooms, above. Recessed downlights in hallways may be retrofitted with **Fixture Type D1** LED downlight trims (verify that the D1 fixture is compatible with the existing downlight housing before ordering). If the fixture is not compatible with the LED retrofit fixture, then consider replacing the fixture altogether with the new construction version of the LED downlight, **Fixture Type D3**.

Figure 90 - Typical Dorm Suite Lavatory Fixture

Figure 89 - Recessed downlight in Dorm Suite hallway

Bathrooms have a lensed “wraparound” fixture mounted above the lavatory sink. These should use T8 lamps and programmed-start electronic ballasts. If they need to be replaced, there are better-looking yet durable fixtures available for this application, but any replacements should continue to use T8 fluorescent lamps.

4.1.3.3 QUAD ENTRANCE LOBBY

4.1.3.3.1 Existing Conditions

The existing lobbies are not very inviting to students or parents. Suspended acoustical ceilings have been installed, which lends a commercial interior appearance to this residential space, and recessed 2x4 lensed fixtures deliver bland and uniform illumination. The narrow entry vestibules have the original incandescent recessed downlights with Fresnel lens trims. These have been appropriately relamped with screwbase compact fluorescent lamps (probably 18W or so).

Figure 91 - Uptown Dormitory Entrance Lobby

4.1.3.3.2 Recommendations for Quad Entrance Lobby Lighting

The lighting system should have a more residential appearance in terms of the look of the fixtures and the pattern of light. By putting concentrated light on seating and circulation areas, plus washing perimeter walls, we would focus attention on artwork or notice boards without the distracting glare of large overhead fixtures. In the open stairwell, wall sconces (that are out of easy reach of students) will draw attention to the wall that leads downward to the Dining Hall.

In the entry vestibules, remove the existing incandescent downlight trims and replace with **Fixture Type D1** 12W LED trims. This solution offers an appearance very similar to the original lighting, but with much longer lamp life (50,000 hours) and much lower power than even the screwbase compact fluorescent lamps.

Remove the existing recessed lighting in the lobby and replace with new recessed compact fluorescent downlights (**Fixture Type D2**) over the seating and circulations areas. Add matching recessed round lensed wallwashers (**Fixture Type W2**) to accent artwork or notice board walls in the lobby. 4' long recessed wallwashers (**Fixture type**

W1) can brighten the walls with a long-life T8 fluorescent lamp as a less-expensive and lower-wattage alternative to a pair of W2 round downlights.

To draw the eye to the stairwell, add three wall sconces (**Fixture Type S4)** to the base of the wall in the two-story stairwell. The wall sconce has a glowing face, but also directs a halo of light to the wall behind it. This will brighten the staircase and add visual interest.

Figure 92 - Suggested wall sconce for Dormitory Quad lobby stairwell

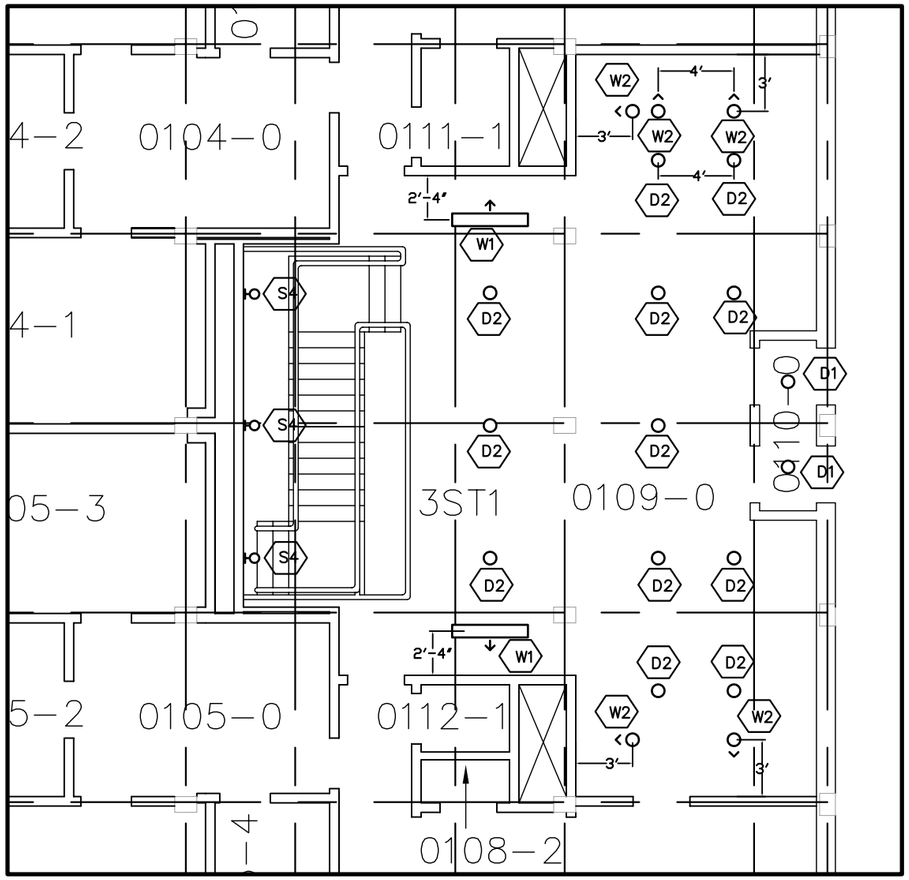

1 Dorm Lobby Lighting Plan

1/8"=1'-0"

Instructions

Remove existing lighting and repair and re-tile existing ceiling grid. Install new lighting in grid as close to shown dimensions as possible.

Target Power Density:

- 1.0 W/square foot allowed by New York Energy Code
- Installed LPD will be approximately 0.6 W/square foot as shown.

Dorm lobby lighting

Performance specification: For Fixture Type D1

- Retrofit LED unit to replace the lamp and fresnel lens trim of original 6" diameter recessed incandescent downlights. 3500K (neutral) light color. Integral power supply. System to produce no perceivable flicker. System efficacy minimum 54 LPW. Pewter anodized trim cone.

Approved products:

LED Lighting Fixtures (LLF) Inc. "LR6CP" See www.llfinc.com. No known equal.

Lamps: LEDs included

Performance specification: For Fixture Type D2

- Recessed compact fluorescent downlight in dormitory lobby with 6" diameter aperture, semi-specular clear cone. Maximum depth of fixture is 6.5". Integral electronic ballast. No direct or reflected lamp image visible above a viewing angle of 45°. Minimum 60% fixture efficiency. New construction housing.

Approved products:

Kurt Versen P921-SC or approved equivalent by Lightolier, Cooper Portfolio, or Omega

Lamps: (1) CFTR32W/835

Performance specification: For Fixture Type S4

Wall sconces with frosted acrylic shield, mounted in stairwell of dorm lobby.

Approved products:

To be selected.

Lamps: (1) CFTR26/835

Performance specification: For Fixture Type W1

- Recessed 8" wide x 4' long T8 fluorescent wallwasher with integral programmed start electronic ballast and kicker reflector. Minimum one-year warranty on fixture, three-year warranty on ballast.

Approved products:

Columbia "Parawash" PW84-132-X-LDK-Voltage-Programmed Start

Lamps: (1) F32T8/835/XPS per 4' length

Performance specification: For Fixture Type W2

- Similar to D2, except recessed compact fluorescent wall washer with angled glass lens. 6" diameter aperture with softglow reflector cone. Ceiling type to be confirmed by contractor. Fixture to not exceed 6" in depth. Minimum 55% fixture efficiency.

Approved products:

Kurt Versen P950-SC

or approved equivalent by Lightolier or Omega

Lamps: (1) CFTR32W/GX24q/830

Date: 05/20/08

Scale: 1/8"=1'-0"

Sheet No. LD4.133

Dorm Lobby

Notes:

University at Albany

Lighting Masterplan

Albany, New York

Naomi Miller Lighting Design, LLC
46 23rd Street
Troy, NY 12180-1913 USA
518.272.2745 voice
info@nmlightingdesign.com;
www.nmlightingdesign.com
Naomi Johnson Miller, FIES, FIALD, LC

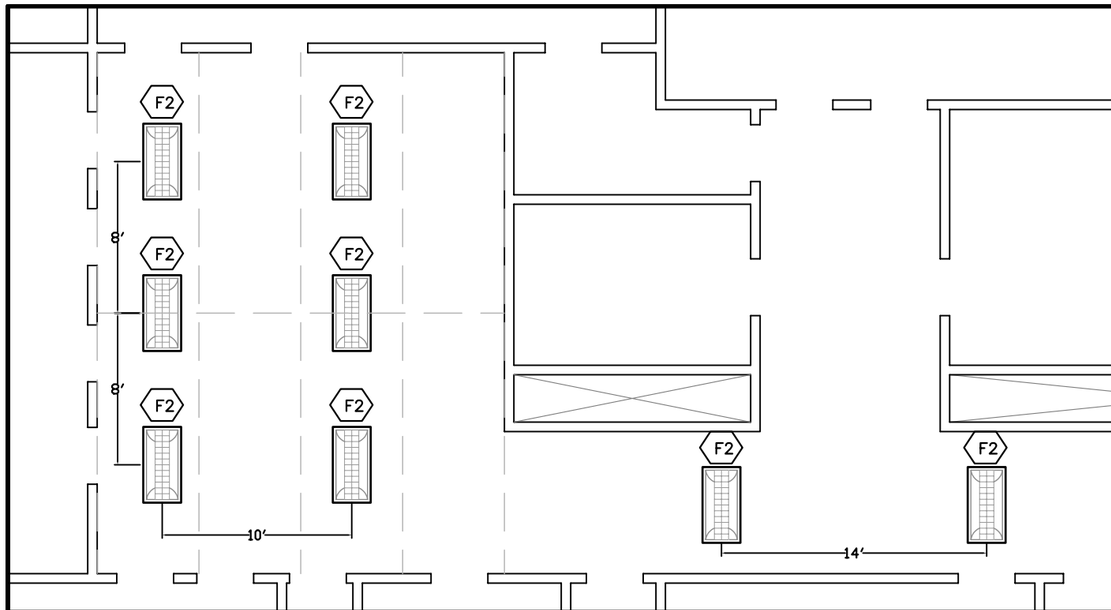

1 Typical Lobby 1 Lighting Plan

1/8"=1'-0"

2 Existing Lobby

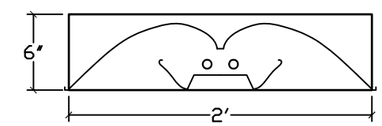

3 Fixture F2 Section

1"=1'-0"

Typical academic lobby1 lighting

Performance specification: For Fixture Type F2

- Recessed 2-lamps in cross section direct/indirect 2' x 4' troffer central louver.
- 6" maximum depth.
- Static.
- Integral electronic programmed rapid-start ballast with normal ballast factor (BF=0.87), Universal B132PUNVHP-A or equivalent.
- Minimum efficiency of 60%.
- Minimum one-year warranty on luminaire, 3 year warranty on ballast.
- Voltage as specified by University at Albany.

Approved products:

- Columbia Lighting STRL24-232-CLG-WCBMPO-EB*-Pro-Start-Volt
- Lightolier
- Metalux

Lamps: (2) F32T8/835/XPS by GE, Philips, Sylvania

Locating instructions

- Remove existing recessed downlights and acoustical ceiling tile as neccessary
- Replace with recessed linear fluorescent indirect/direct "basket" troffer.
- Space fixtures approximately 10' on center perpendicular to lamps; 8'-10' o.c. parallel to lamps.

Target Illuminance:

- 10 fc average maintained, assuming
- Ballast factor of 0.87
- Light loss factors (LLF) of 0.75 (incl. BF)

Target Power Density:

- 0.8 W/square foot allowed per New York Energy Code
- Installed LPD will be approximately 0.6 W/square foot as shown.

Date: 05/20/08

Scale: Varies

LD4.133-A

Sheet No.

Typical Lobby 1

Notes:

University at Albany

Lighting Masterplan
Albany, New York

Naomi Miller Lighting Design,LLC
46 23rd Street
Troy, NY 12180-1913 USA
518.272.2745 voice
info@nmlightingdesign.com;
www.nmlightingdesign.com
Naomi Johnson Miller, FIES, FIALD, LC

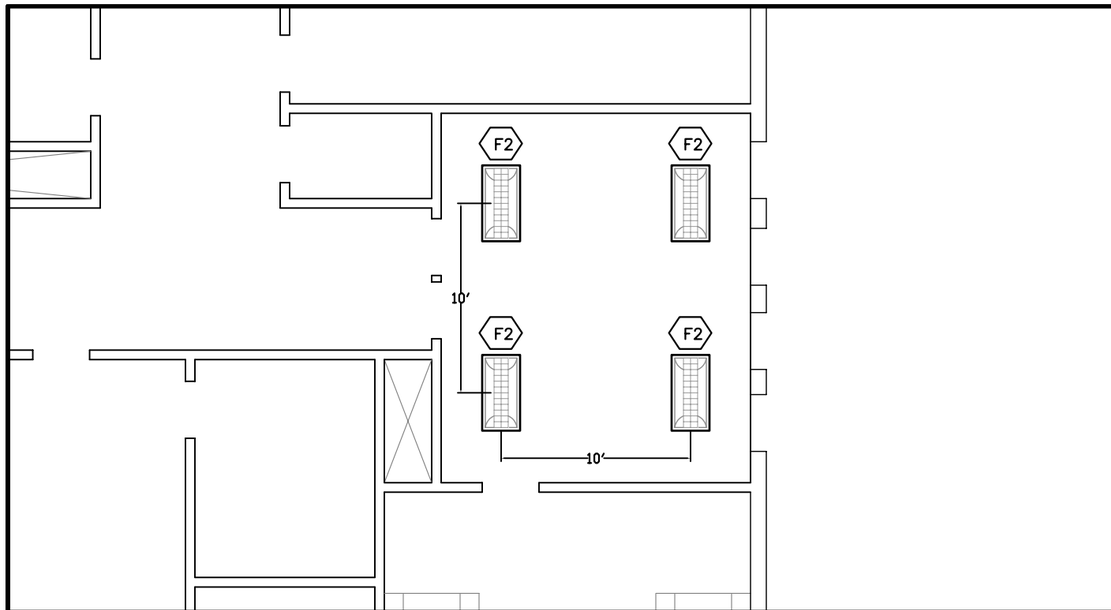

1 Typical Lobby 2 Lighting Plan

1/8"=1'-0"

2 Existing Lobby

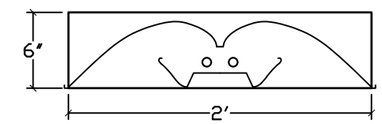

3 Fixture F2 Section

1"=1'-0"

Typical academic lobby2 lighting

Performance specification: For Fixture Type F2

- Recessed 2-lamps in cross section direct/indirect 2' x 4' troffer with central louver.
- Nominal dimensions of 2' wide x 4' long x maximum depth of 6".
- Static.
- Integral electronic programmed rapid-start ballast with normal ballast factor (BF=0.87), Universal B132PUNVHP-A or equivalent.
- Minimum efficiency of 60%.
- Minimum one-year warranty on luminaire, 3 year warranty on ballast.
- Voltage as specified by University at Albany.

Approved products:

- Columbia Lighting STRL24-232-CLG-WCBMPO-EB*-Pro-Start-Volt
- Lightolier
- Metalux

Lamps: (2) F32T8/835/XPS by GE, Philips, Sylvania

Locating instructions

- Remove existing recessed downlights and acoustical ceiling tile as neccessary
- Replace with recessed linear fluorescent indirect/direct "basket" troffer.
- Space fixtures approximately 10' on center perpendicular to lamps; 8'-10' o.c. parallel to lamps.

Target Illuminance:

- 10 fc average maintained, assuming
- Ballast factor of 0.87
- Light loss factors (LLF) of 0.75 (incl. BF)

Target Power Density:

- 0.8 W/square foot allowed per New York Energy Code
- Installed LPD will be approximately 0.6 W/square foot as shown.

Date: 05/20/08

Scale: Varies

LD4.133-B

Sheet No.

Typical Lobby 2

Notes:

University at Albany

Lighting Masterplan
Albany, New York

Naomi Miller Lighting Design,LLC
46 23rd Street
Troy, NY 12180-1913 USA
518.272.2745 voice
info@nmilightingdesign.com;
www.nmilightingdesign.com
Naomi Johnson Miller, FIES, FIALD, LC

4.1.3.4 QUAD DORMITORY CORRIDORS

4.1.3.4.1 Existing conditions

Original lighting for these narrow 4' wide corridors was recessed incandescent (probably 100W) downlights with Fresnel lenses, spaced 5' on center. In some of the Quads these lights have been simply been retrofitted with 18W to 20W screwbase compact fluorescent retrofit lamps. This leaves the corridor looking gloomy.

A small number of Quad dormitories have had their narrow corridor ceilings renovated with new 2x4 T-bar and acoustical tile on the same spacing. The new lighting is recessed 26W compact fluorescent downlights with a shiny aluminum reflector, delivering a much improved appearance compared to the original downlights with the retrofit lamp. Because they produce pronounced "scallops" (or arcs) of light on the corridor walls, the walls are not uniformly lighted and consequently are perceived as being smaller than they really are.

Figure 93 - Existing Quad Dorm Corridor (corridor shown is wider than in upper levels)

4.1.3.4.2 Recommendations for Quad Dormitory Corridors

In the interest of reducing maintenance and making the corridors look larger, we recommend replacing the existing downlights with a recessed linear 1' x 4' T8 fluorescent fixture **(Fixture Type F1)**, with one lamp in cross-section, spaced 12' on center. This would be a perforated basket-style fixture which lends a sense of brightness to the corridor because it throws light softly onto surrounding surfaces. Space it 12' on center along the length of the corridor.

Alternate Lighting Design

Where plenum spaces are crammed with ducts and pipes and cabling, it may not be possible to consistently recess a 4' fixture in the ceiling. There may only be room for a recessed downlight. In this case, use a new downlight **(Fixture Type D1)** spaced 6' o.c. that uses LEDs for long life.

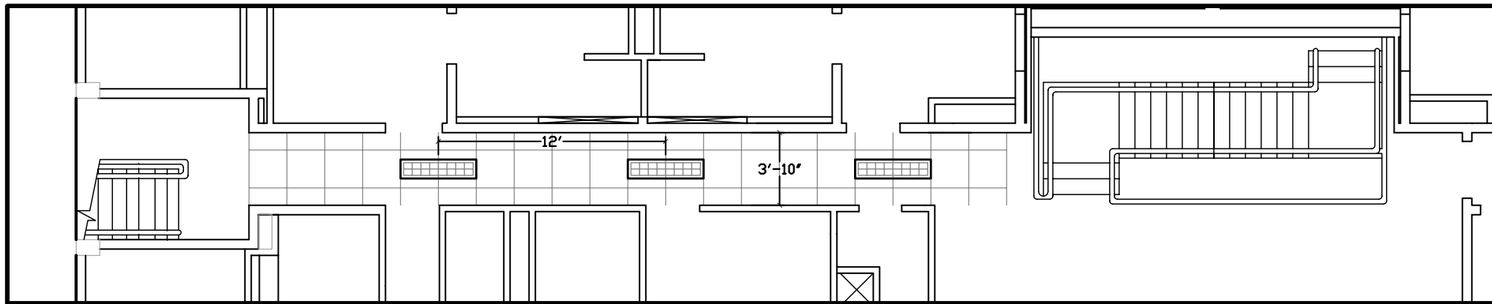

1 Corridor Lighting Plan

1/8"=1'-0"

Note : Use LED downlight by LLF (Fixture Type D1), if there is no room for recess downlights (Fixture Type F1).

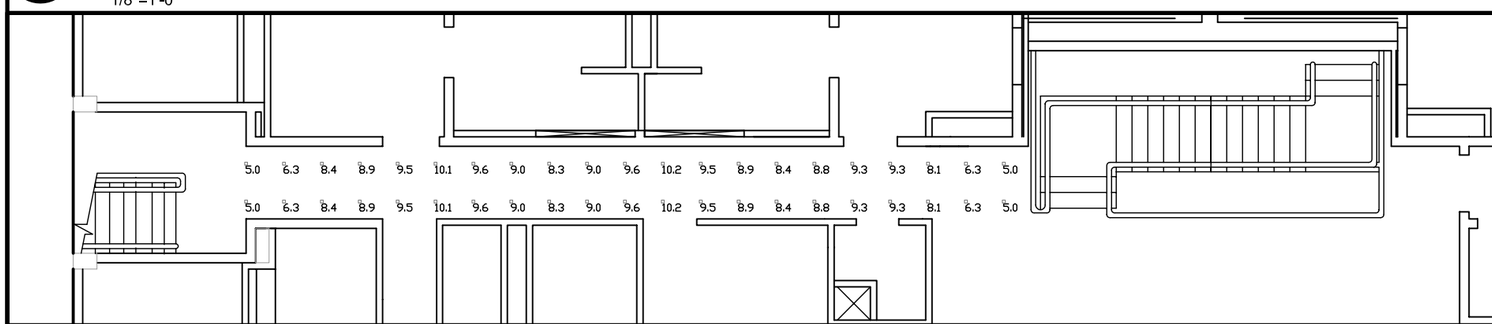

2 Corridor Lighting Calculation

1/8"=1'-0"

Photo shows recently renovated corridor. Most of these corridors still have original recessed incandescent downllights with fresnel lenses.

3 Existing Dorm Corridor

1"=1'-0"

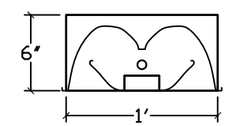

4 Fixture F1 Section

1"=1'-0"

F1: Dorm corridor lighting
Performance specification:
Recessed 1'x4' fluorescent "direct/indirect" troffer with louvered downlight. One T8 fluorescent lamp in cross section. Integral programmed start electronic ballast, Universal B132PUNVHP-A or equivalent. Mounting will vary according to installation, so ceiling type in catalog number has been replaced with "CLG". Minimum 60% luminaire efficiency. Minimum one-year warranty on luminaire, 3-year warranty on ballast.

Approved products:
Columbia STRL14-132-CLG-WCBMPO-EB-Prostart-Volt
or Linear Lighting
CBL14-D1ET8-PRD/PXL-CLG-BW-PSB10-4
or Lightolier PPS1-CLG-6WW132-Volt-Prostart

Lamps: (1) F32T8/835/XPS by GE, Philips, Sylvania

Locating instructions
- Remove existing recessed downlights and acoustical ceiling tile as necessary
- Replace with recessed linear fluorescent indirect/direct "basket" troffer.
- Locate the troffer in the center of the corridor. Structure ACT ceiling around this location and layout.
- Space recessed troffers 12' on center (O.C.)
- Orient the fixture so the long-axis (4' length) is perpendicular to the length of the hallway.

Target Illuminance:
- 10 fc average maintained, assuming ballast factor of 0.87 and light loss factors (LLF) of 0.75 (incl. BF)

Target Power Density:
- 0.8 W/square foot allowed per New York Energy Code
- Installed LPD will be approximately 0.6 W/square foot per 12' O.C. spacing with specified ballast

Controls :
- Passive infrared ceiling sensors can be installed to automatically switch off 2/3 of fixtures at night.

Date: 05/20/08
Scale: Varies
LD4.134
Sheet No.

Dorm Corridor
Notes:

University at Albany
Lighting Masterplan
Albany, New York

Naomi Miller Lighting Design, LLC
46 23rd Street
Troy, NY 12180-1915 USA
518.272.2745 voice
info@nmlightingdesign.com;
www.nmlightingdesign.com
Naomi Johnson Miller, FIES, FIALD, LC

4.2 INTERIOR LIGHTING – DOWNTOWN CAMPUS

4.2.1.1 PAGE AUDITORIUM, PAGE HALL

4.2.1.1.1 Existing Conditions

Important lectures and ceremonial events such as graduation take place in Page Auditorium. Sadly, the Hall looks dated without having historical charm. It has undergone at least one renovation that has added light fixtures that deliver undimmable, poor color light that distracts from its original character. Lighting is switched on and off in a clumsy fashion that does not support the visual needs of the different activities that take place here.

Figure 95 - Page Auditorium chandelier

Figure 94 - Page Auditorium view from stage

Figure 96 - Page Auditorium view from balcony

4.2.1.1.2 Recommendations for Page Auditorium

Lighting improvements should be made at the same time as the auditorium is restored. For aesthetic and preservation reasons, it is important to coordinate the lighting with the architecture and interior design improvements. Here is a set of recommended changes to improve the appearance of this important auditorium and improve the reading and

circulation lighting for the audience. Specific layouts of fixtures and recommended decorative fixtures will be done in conjunction with the preservation/design team.

Remove the following:

- Existing fluorescent valance lighting along the side walls of the balcony (because it is not in character with the age or style of the auditorium and does not provide effective lighting)
- Existing recessed metal halide downlights (because they are old-technology metal halide and are inconsistent in color appearance, glaring, and poor in color rendering)
- Existing "circline fluorescent surface-mounted lighting on the underside of the balcony (because they are bluish in color and poor at color rendering, and the fixture looks cheap and out-of-place relative to the original grandeur of the auditorium)
- Existing recessed downlights in the sloped surface above the stage opening (because they are large apertures and impossible to reach to maintain)

Recommended changes:

- Have a historic preservation specialist examine the existing chandeliers. If they are original and aesthetically appropriate for the auditorium, they need to be restored and examined to see if it is possible to conceal additional useful lighting within them. Each chandelier should be mounted on a lowering mechanism to allow for easier maintenance. These chandeliers should be lamped with very low wattage, decorative halogen flame-shaped lamps. They are intended to be jewelry for the space, not to deliver high illuminances.
- Install matching Georgian wall sconces on the projection booth wall in the balcony, as well as the side walls of the balcony between sealed windows, replacing the existing fluorescent fixtures. These sconces will also be lamped with low-wattage halogen decorative bulbs.
- Install new adjustable recessed downlights in the upper ceiling, accessible from the attic. These can be 32W dedicated dimmable compact fluorescent fixtures with a narrow, medium, or wide distribution, depending on whether they are mounted over the tall, medium, or lower-ceiling areas, respectively. The lamps should be the same for all three locations: 32W triple-tube compact fluorescent, 3000K. The lamps are accessible from the attic space above the fixture for relamping. (Example fixture: Kurt-Versen P926-DM Series, if it is available in a top-accessible version.)
- Install new decorative ceiling-mounted fixtures to the underside of the balcony, style to be determined. The fixture should combine both dimmable compact fluorescent lamps and decorative halogen lamps.
- The auditorium lighting should all be rewired so that it can be controlled from an architectural dimming system. The master scene controller should be located in the projection booth, with additional house controls located at entrances where the facility manager can access them easily. The control system can be ETC Controls or equivalent.

- Above the stage area, add fluorescent "industrials" above the draperies, to provide cleaning and setup lighting.

4.2.1.2 DOWNTOWN CAMPUS - DEWEY LIBRARY

4.2.1.2.1 Existing Conditions

This library in Hawley Hall is an architectural treasure, with hand-painted murals and beautiful stained glass windows. The ceiling is articulated with coffers. Originally there was a large skylight, but it has been covered over and the plenum used for mechanical ducting. There is an acoustical ceiling at the skylight opening, with an unfortunate array of ugly air diffusers.

Originally there were eight chandeliers hanging in the space, but these have disappeared and were replaced in the late 80s or '90s with nine clustered bowl pendants illustrated below, using metal halide lamps. Although this solution probably provides more light than the original chandeliers, they are stylistically out of place. The metal halide lamps shift in color and lose output quickly. The color rendering is only fair. The pendants had been equipped with lowering mechanisms, but these no longer work.

Figure 97 - Dewey Library

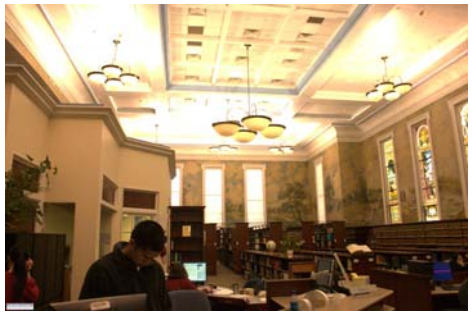

Figure 98 - Dewey Library

4.2.1.2.2 Recommendations for Dewey Library

- Remove the cluster bowl chandeliers. Replace them with Georgian-style 24-arm brass chandeliers that were removed from another building in the Downtown campus. These chandeliers, depicted below, have been stored in Uptown Service Building C and need restoration. These can be lamped with very low wattage, clear filament, long-life incandescent lamps (15W, 8000 hour S14-style lamps) for a decorative appearance reminiscent of the lamps that would have been installed originally. **(Fixture Type Q7)** (Note: LED lamp replacements may soon be available for this application. Investigate this possibility when this work is ready to be performed.)
- Put each of the eight chandeliers on a new lowering mechanism (by JR Clancy or equivalent, www.jrclancy.com) that has a superior, reliable performance.
- Mount indirect 150W metal halide uplights around the perimeter of the library, located immediately above the bookcases or wood molding at the top of the wainscoting. This will illuminate the ceiling and contribute ambient lighting to the space. This will also make the stained glass windows visible at night from the outside, although they will not be dramatically lighted. **(Fixture Type S17)**
- Provide task lighting for carrels, workstations, and the check-out desk. These fixtures can be contemporary or may be traditional-looking reading lights with efficient fluorescent light sources. The bookstacks have horizontal structural members that are ideal for mounting linear fluorescent stack lights **(Fixture Type L11).** See photo below.

Figure 99 - Dewey Library chandelier in storage

Figure 100 – Example of a bookstack lighting fixture

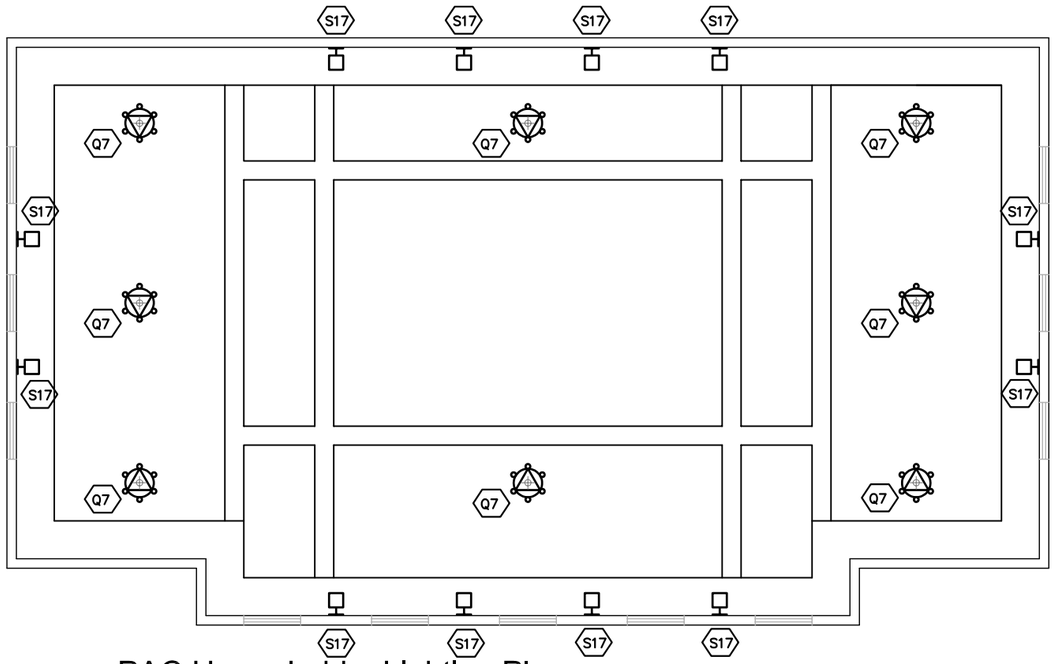

1 PAC Upper Lobby Lighting Plan

1/16"=1'-0"

NOTE: No accurate floor plan available forthis space.

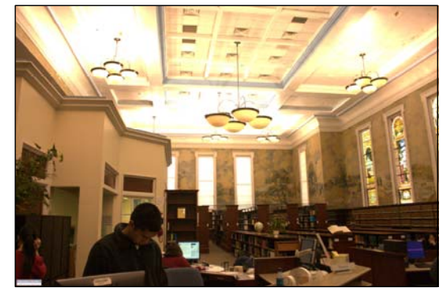

3 Upper PAC Lobby

4 Fixture Type

Design Concepts

- Restore + Replace original chandeliers with automatic lowering mechanism.
- Build in task Lights on working tables, bookcases, checkout desk.
- 150 W CMH Rambusch uplights along perimeter (S17)

Date: 05/20/08

Scale: Varies

LD4212-A

Sheet No.

Downtown Campus

Notes:

Dewey Library

University at Albany

Lighting Masterplan
Albany, New York

Naomi Miller Lighting Design, LLC
46 23rd Street
Troy, NY 12180-1913 USA
518.272.2745 voice;
info@nmlightingdesign.com;
www.nmlightingdesign.com
Naomi Johnson Miller, FIES, FIALD, LC

4.2.1.3 TYPICAL DOWNTOWN ACADEMIC BUILDING CORRIDOR

4.2.1.3.1 Existing Conditions

In general, the corridors are wide, ranging from 8 to 14', with a lay-in ceiling grid and recessed 2'x4' lensed fixtures. The fixtures run perpendicular to the length of the corridor, spaced 10 to 12' on center, depending on the corridor. The fixtures have three T8 lamps in cross-section. The fixtures do an acceptable job of lighting the corridor, but have a dated and bland appearance. General light levels are very uniform, but higher than they need to be.

Figure 101 - Typical downtown campus corridor

4.2.1.3.2 Recommendations

Replace existing fixtures in existing locations with new **Fixture Type F2**. This is a 2' x 4' recessed fixture with two T8 lamps in cross-section, saving 33% of the lighting power. Sometimes called a "recessed indirect/direct" fixture, it has a white upper reflector that produces diffuse reflected light, a center lamp chamber, and louvers below the lamps to produce comfortable downward light. This fixture is relatively inexpensive, easy to install and relamp, uses very long life T8 lamps, and has a more pleasing contemporary appearance than the existing lensed fixtures. It will still help light the corridor walls so that it looks safe.

One possibility for additional energy savings is to install occupancy sensors in corridors. Every third fixture would remain on a constant nightlight circuit. The two fixtures between these nightlight fixtures would be switched off by a ceiling-mounted ultrasonic sensor specifically designed for corridors (such as the Watt-Stopper WT-255). If the building has a whole-building control panel, the occupancy sensor operation could be overridden during the day so that lights did not switch off and on during class hours.

After hours, the occupancy sensors would switch off 2/3 of the lighting after 10 minutes of inactivity, but bring them back on again instantly as soon as someone stepped into the corridor. Sensor spacing will vary according to the specific corridor configuration, but could be as much as 90' apart.

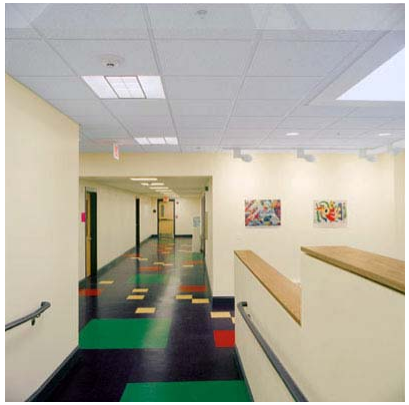

Figure 102 – Photo of Fixture Type F2 recommended for Downtown Campus corridors

Figure 103 - Ceiling mount ultrasonic occupancy sensor

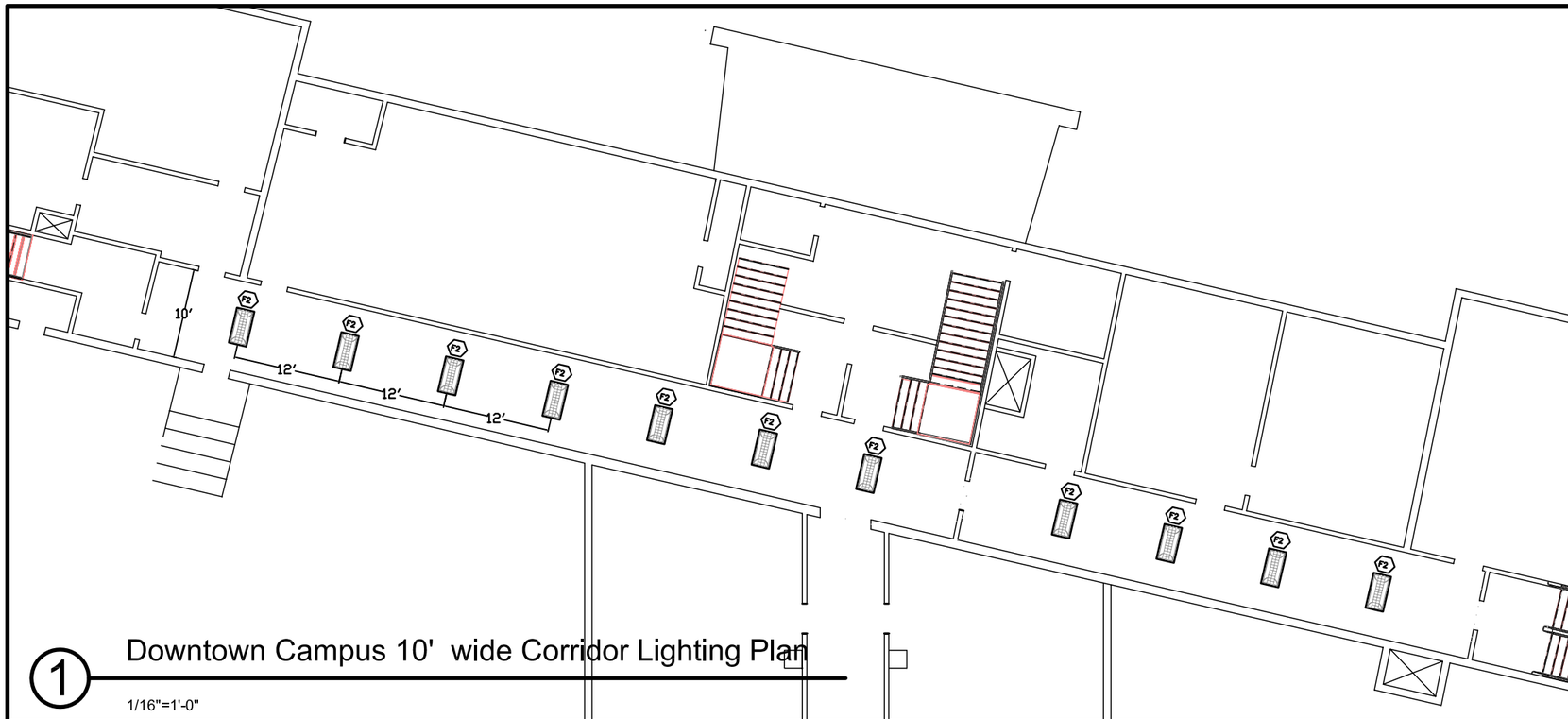

1 Downtown Campus 10' wide Corridor Lighting Plan

1/16"=1'-0"

2 Existing Corridor

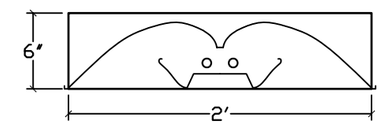

3 Fixture Type F2 Section

1"=1'-0"

Typical Downtown Campus corridor lighting (10' wide)

Performance specification: For Fixture Type F2

- Recessed 2-lamps in cross section direct/indirect 2' x 4' troffer central louver.
- Nominal dimensions of 2' wide x 4' long x maximum depth of 6".
- Static.
- Integral electronic programmed rapid-start ballast with normal ballast factor (BF=0.87), Universal B232PUNVHP-A or equivalent.
- Minimum efficiency of 60%.
- Minimum one-year warranty on luminaire, 3 year warranty on ballast.
- Voltage as specified by University at Albany.

Approved products:

- Columbia STRL24-232-CLG-WCBMPO-EB-Prostart-Volt
  or Linear Lighting CBL24-D2ET8-PRD/PXL-CLG-BW-PSB10-4
  or Lightolier PPS2-CLG-6WW232-Volt-Prostart

Lamps: (2) F32T8/835/XPS by GE, Philips, Sylvania

Locating instructions

- Remove existing recessed fixtures and acoustical ceiling tile as necessary
- Replace with recessed 2x4 fluorescent indirect/direct "basket" troffer.
- Space recessed troffers 12' on center (O.C.)
- Orient the fixture so the long-axis (4' length) is perpendicular to the length of the hallway.

Target Illuminance:

- 10 fc average maintained, assuming ballast factor of 0.87 and light loss factors (LLF) of 0.75 (incl. BF)

Target Power Density:

- 0.8 W/square foot allowed per New York Energy Code
- Installed LPD will be approximately 0.5 W/square foot per 12' O.C. spacing with specified ballast

Date: 05/20/08

Scale: 1/16"=1'-0"

LD 4.1213-A

Sheet No.

Downtown Campus

Typical corridor 10' wide

Notes:

University at Albany

Lighting Masterplan

Albany, New York

Naomi Miller Lighting Design
46 23rd Street
Troy, NY 12180-1913 USA
518.272.2745 voice; 518.272.2953 fax
info@nmlightingdesign.com;
www.nmlightingdesign.com
Naomi Johnson Miller, FIES, FIALD, LC

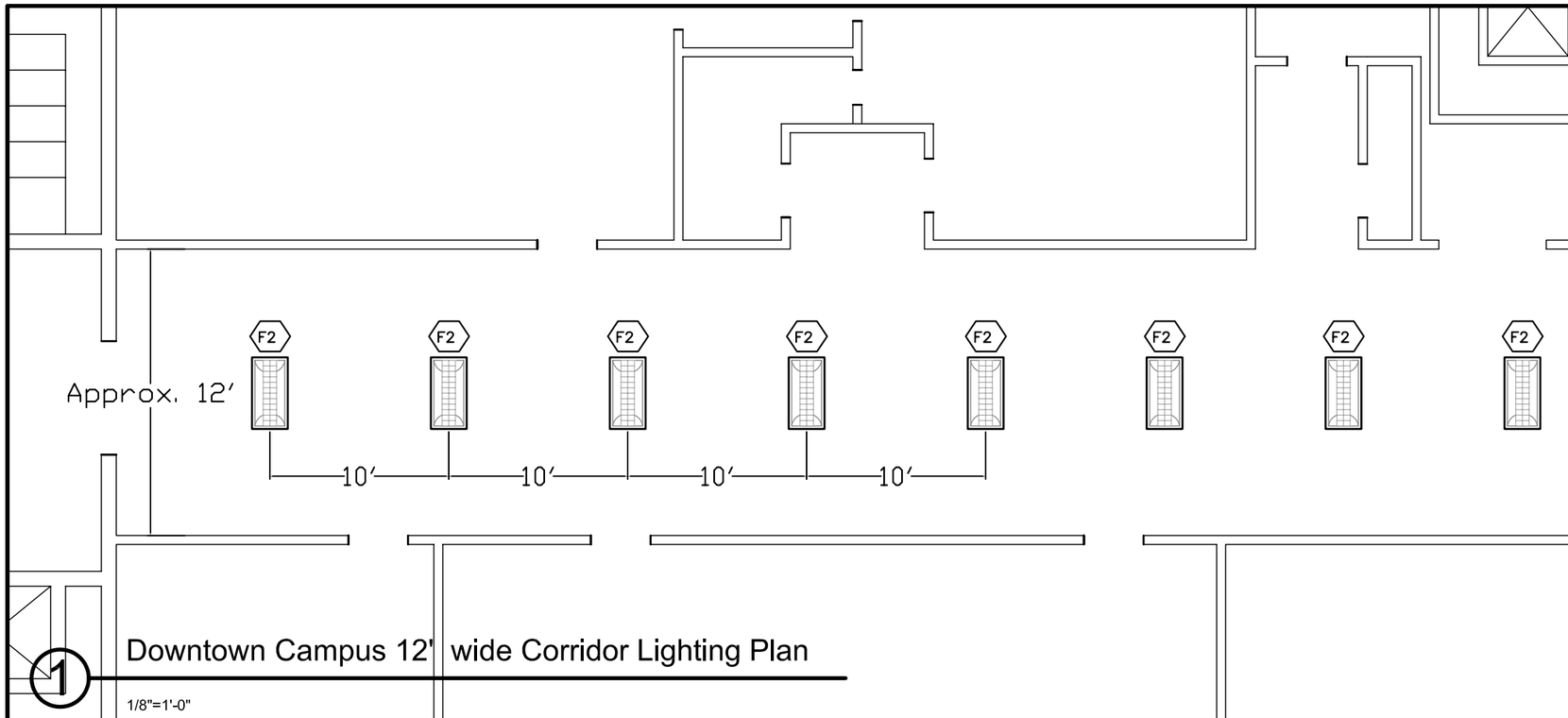

1 Downtown Campus 12' wide Corridor Lighting Plan

1/8"=1'-0"

2 Existing Corridor

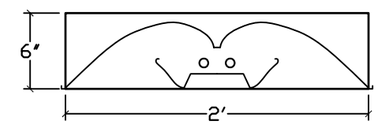

3 Fixture Type F2 Section

1"=1'-0"

Typical Downtown Campus corridor lighting (12' wide)

Performance specification: For Fixture Type F2

- Recessed 2-lamps in cross section direct/indirect 2' x 4' troffer central louver.
- Nominal dimensions of 2' wide x 4' long x maximum depth of 6".
- Static.
- Integral electronic programmed rapid-start ballast with normal ballast factor (BF=0.87), Universal B232PUNVHP-A or equivalent.
- Minimum efficiency of 60%.
- Minimum one-year warranty on luminaire, 3 year warranty on ballast.
- Voltage as specified by University at Albany.

Approved products:

- Columbia STRL24-232-CLG-WCBMPO-EB-Prostart-Volt
  or Linear Lighting CBL24-D2ET8-PRD/PXL-CLG-BW-PSB10-4
  or Lightolier PPS2-CLG-6WW232-Volt-Prostart

Lamps: (2) F32T8/835/XPS by GE, Philips, Sylvania

Locating instructions

- Remove existing recessed fixtures and acoustical ceiling tile as necessary
- Replace with recessed 2x4 fluorescent indirect/direct "basket" troffer.
- Space recessed troffers 10' on center (O.C.)
- Orient the fixture so the long-axis (4' length) is perpendicular to the length of the hallway.

Target Illuminance:

- 10 fc average maintained, assuming ballast factor of 0.87 and light loss factors (LLF) of 0.75 (incl. BF)

Target Power Density:

- 0.8 W/square foot allowed per New York Energy Code
- Installed LPD will be approximately 0.5 W/square foot per 10' O.C. spacing with specified ballast

Date: 05/20/08

Scale: Varies

LD 4.1213-B

Sheet No.

Downtown Campus

Typical corridor 12' wide

Notes:

University at Albany

Lighting Masterplan
Albany, New York

Naomi Miller Lighting Design
46 23rd Street
Troy, NY 12180-1913 USA
518.272.2745 voice; 518.272.2953 fax
info@nmlightingdesign.com;
www.nmlightingdesign.com
Naomi Johnson Miller, FIES, FIALD, LC

4.2.1.4 TYPICAL DOWNTOWN CLASSROOM

4.2.1.4.1 Existing Conditions

The classrooms originally had tall ceilings, but suspended acoustical tile ceilings have been installed to hide wiring, plumbing, and other infrastructure. Recessed 2x4 3-lamp fluorescent fixtures were installed to provide uniform, high light levels with low cost. (The existing lamps are T8 fluorescent, although these may have been T12 retrofits from the 1980s or 1990s.) The fixtures look dated, are too bright for comfortable laptop computer use and Powerpoint projections, and use 50% more power than necessary.

When the building undergoes a significant restoration, we can hope that these acoustical ceilings will be removed to expose the taller ceilings, perhaps boxing in the infrastructure. The recommendation below suggests a fixture that works with both the existing acoustical ceiling and a future taller ceiling.

Figure 104 - Typical Downtown Classroom

Figure 105 - Downtown classroom with low ceiling

4.2.1.4.2 Recommendations

Remove the existing recessed fluorescent fixtures. Replace all acoustical ceiling tiles, not just those that are missing, with new high-reflectance white ceiling tiles. Install continuous rows of direct/indirect fluorescent pendants (**Fixture type L12**) spaced no more than 12' on center. (If room is less than 20' wide, space rows 10' apart.) Overall suspension length is 24".

These linear fixtures for the Downtown Campus are a different shape than recommended for the Uptown Campus, because we are not trying to mimic the appearance of a historical fixture. The fixtures are rectangular, wider and less tall than the Uptown classroom fixtures, but also produce both uplight and downlight. In these classrooms we can implement a very efficient, flexible lighting system. The fixtures have three lamps in cross section, with the inner lamp capped with a reflector to direct light downward only. The center lamps are switched separately from the outer lamps. The instructor can switch on the outer lamps only, directing light on the ceiling and low-glare light down to the desks for normal classroom activities. When Powerpoint projections are used, the instructor can switch the outer lamps off and switch on the center lamp only. This gives the students a low-level of note-taking light that does not interfere with the projection image. The row of fixtures next to the projection screen is switched separately from the other row(s) in the classroom so that the instructor can combine the options to produce the best lighting scenario.
The wall switch is a "double pole double throw" switch, which allows the instructor to select the outer lamps or the inner lamps, but never both. This keeps the power use to a

minimum. In addition, there will be a dual-technology (combination Passive Infrared (PIR) and Ultrasonic or Microphonic) occupancy sensor located at the classroom ceiling that will automatically switch off all lights when the room is unoccupied. This system has been extensively studied in New York and California for energy effectiveness and user acceptance. Although the system can be built by any manufacturer of fixtures and sensors, one manufacturer has a complete system pre-engineered for specification and ordering. More information is available on this at http://www.finelite.com/download_files/ICLS/ICLS_SpecManual_low.pdf

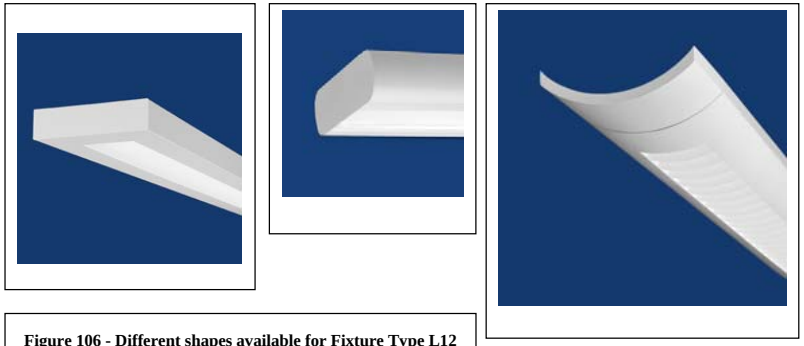

Figure 106 - Different shapes available for Fixture Type L12

The following photos show the different switching options available with the recommended fixtures.

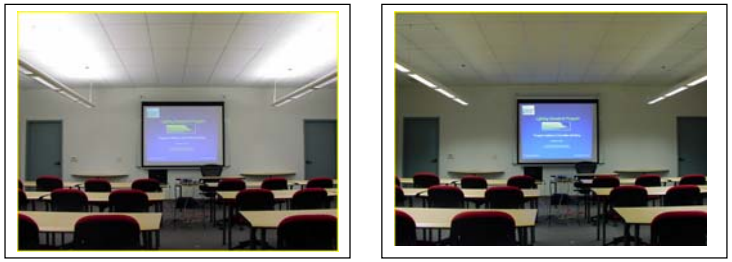

Figure 107 - Different classroom switching options available (Photos from Finelite, CEC/NYSERDA Pier Research Program)

Note for low-ceiling classrooms on Downtown Campus:
When lay-in acoustical ceiling heights are lower than 8'-6", consider installing a new ceiling at a higher mounting height above the floor. The direct/indirect pendant fixtures will work with an overall suspension length of only 18" if required, but fixtures should not be mounted lower than 7' above the floor. If the ceilings cannot be raised, consider replacing the existing 2x4 lensed fixtures with **Fixture Type F2** on 8' x 8' spacing. The row of fixtures nearest the projection wall should be switched separately.

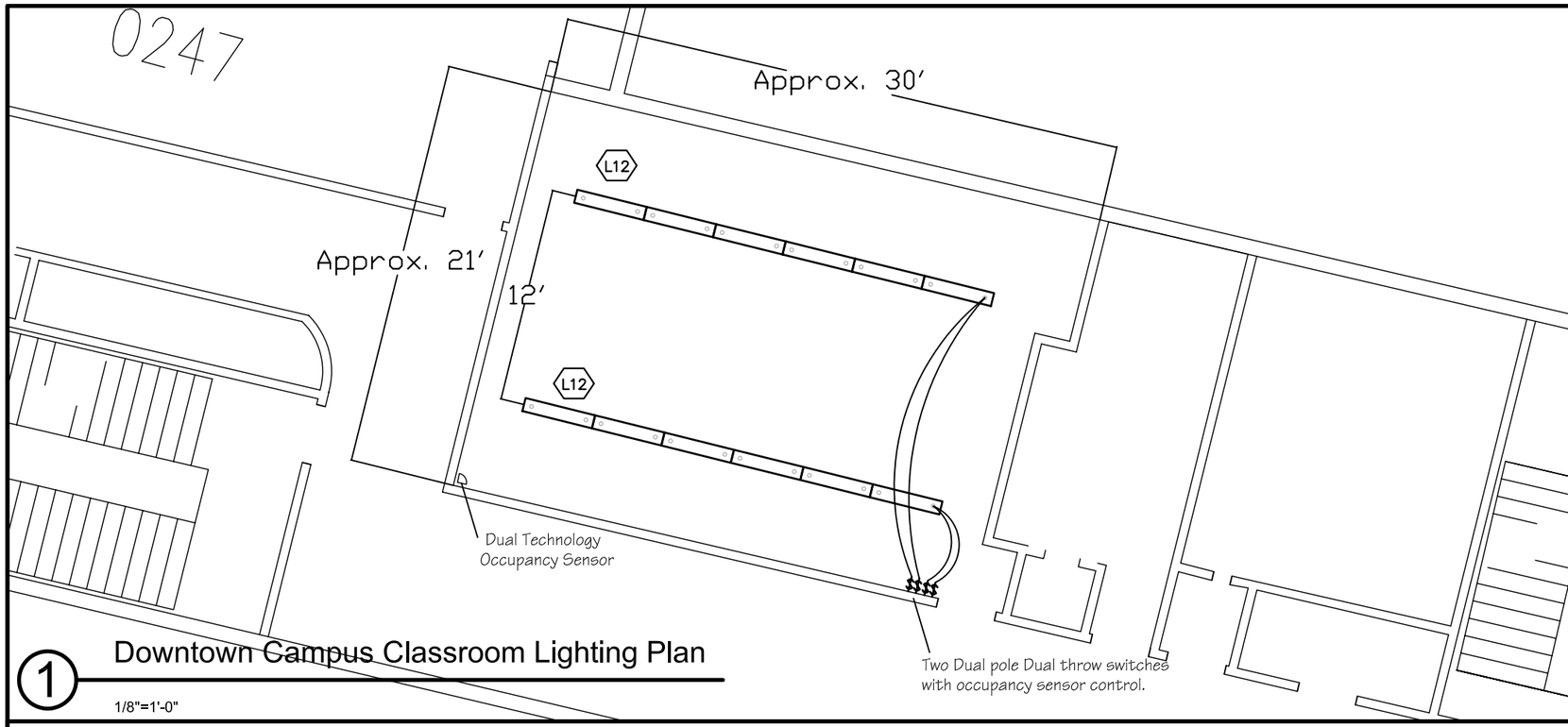

1 Downtown Campus Classroom Lighting Plan

1/8"=1'-0"

Typical Downtown Campus classroom lighting (21'x30')

Performance specification: For Fixture Type L12

- 4', 8', 12', 16', 20', or 24' long direct/indirect fluorescent fixture for classrooms. Three T8 lamps in cross-section, outer lamps on separate switch circuit than inner lamp. (All three lamps are never switched on at the same time.) Lamps tandem-wired to minimize number of ballasts required. Center lamp has reflector to direct light downward only. Outer two lamps direct light up and down. Parabolic baffle on downward side with minimum 30 degree lengthwise shielding. Housing is extruded aluminum, approximately 2-3" tall x 8-10" wide, with standard painted finish as selected by University. Integral programmed-start ballasts, Philips Optanium or equivalent. Center lamp operation only minimum fixture efficiency 48%, outer lamp only minimum fixture efficiency 75% efficiency.

Approved products:

- Finelite "Series 16" 16-SSL-length-3T8-DC-91W-CCO-Volt-AC-FE-Optanium.
- Litecontrol "LC-82" P-ID-8234-T8-PBSSHP-CWM-Tandem-wiring-ProgStart Electronic-2CWQ-Center lamp optics.
- Lightolier "Energos" EG2-3-BK-P-8-Volt-W-Center lamp optics.

Lamps: (3) F32T8/XPS/835 (per 4' length) by GE, Philips, Sylvania

Locating instructions

- Suspend fixture 18-24" O.A. from ceiling.
- (6) 4' fixtures arrayed straight run 12' O.C. row spacing.

Target Illuminance:

- 10 fc average maintained, assuming ballast factor of 0.87 and light loss factors (LLF) of 0.75 (incl. BF)

Target Power Density:

- 1.6 W/square foot allowed per New York Energy Code (Compare to 2.6 W/sf for current installation)
- Installed LPD will be approximately 1.1 max W/square foot per 12' O.C. spacing with specified ballast

3 Existing Classroom

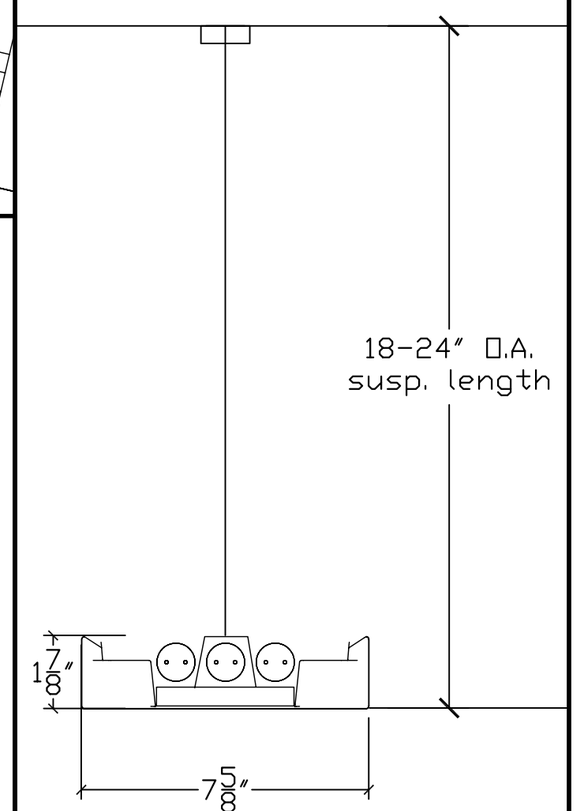

4 Fixture type L12 section

3"=1'-0"

Date: 05/20/08

Scale: Varies

LD4.1214

Sheet No.

Downtown Campus

Classroom

Notes:

University at Albany

Lighting Masterplan

Albany, New York

Naomi Miller Lighting Design, LLC
46 23rd Street
Troy, NY 12180-1913 USA
518.272.2745 voice
info@nmlightingdesign.com;
www.nmlightingdesign.com
Naomi Johnson Miller, FIES, FIALD, LC

5 GUIDELINES, PRIORITIES, AND COST ESTIMATE

5.1 PRIORITIES FOR PHASING WORK

The masterplan work will need to be performed over several years, as funds for renovation are available. Here are suggested priorities for phasing of work:

- Safety
- High Visual Impact or Ceremonial Importance
- Low-hanging fruit for energy savings where lighting improvements will pay back the investment quickly (particularly since NYSERDA funding can help offset the cost of the work)
- Exterior lighting changes that will reduce complaints of glare and reduce unneeded uplight (such as tennis and field hockey sportsfields)
- Outdoor lighting poles and fixtures that need to be replaced anyway because they have sustained damage (these should be replaced in groups so that the whole parking lot or walkway looks uniform and that the older fixtures do not look dramatically brighter than the new)

1. Exterior areas that pose safety concerns:
    a. Walkways between Uptown Campus academic buildings and dormitories at Colonial, Dutch, Indian, and State Quads
    b. Walkways between academic buildings and bus stops
    c. Areas of high pedestrian traffic and vehicular traffic
    d. Ask Campus Safety Committee for their list of critical areas
    e. The Podium Plaza area, where light levels are low and stairs are poorly lighted
    f. Downtown Campus walkways between bus stops, Thurlow Terrace parking lot and the academic buildings.
    g. Alumni Quad walkways

2. Low-hanging fruit: Interior areas where there are obvious energy savings because they needlessly use inefficient lighting technology and operate more than two hours per day:
    a. Any light fixtures that use incandescent lamps that don't require dimming or the special optical qualities of incandescent lamps (for accent lighting, for example)
    b. Any fluorescent fixtures that still use T12 (1.5" diameter) fluorescent lamps should be retrofitted with T8 lamps and electronic ballasts. This will reduce the power use up to 30%. Furthermore, if the area is overlighted, a Programmed Start Low Ballast Factor (LBF) ballast can be used to reduce power use by an additional 20%.
    c. Areas where lighting remains switched on when not occupied should be evaluated for occupancy sensor installation. Occupancy sensors that

automatically switch off half to 2/3 of the lighting, rather than all of the lighting, can be considered for rooms that would look unsafe if completely darkened.
    d. Areas that pose significant power savings, such as Classrooms with original linear fluorescent lighting, or the Basketball Gymnasium

3. Areas with high visual impact, ceremonial importance for historical campus elements:
    a. Ballroom
    b. Performing Arts Center Lobby
    c. Collins Circle Podium Entrance Saucers
    d. Podium Plaza
    e. Campus Center Lobby and Dining Center
    f. Library Entrance
    g. Downtown Campus Page Auditorium
    h. Downtown Campus Dewey Library
    i. Uptown Campus lower level podium concourse (i.e. Refurbish saucers, and shorten stems)

4. Areas that should be completely redesigned through a significant renovation rather than a lighting upgrade:
    a. Performing Arts Center theatres, rehearsal spaces, corridors, and workshop
    b. Large Lecture Halls

5. Any equipment to be added or replaced due to repair or remodeling, such as wallpacks or wall sconces: Dormitory lobbies, corridors, and suites.

5.2 GUIDELINES FOR DESIGNERS/ENGINEERS

General

- Be sensitive to historical appearance of both campuses. Restore historical elements in important visual impact areas (saucers, box lights, linear fixtures in barrel vault ceiling coffers). If it is necessary to remodel a space in order to improve function for a new or changing use, try to reuse elements. If it is impossible, then at least specify that the historical elements be preserved elsewhere on campus, particularly saucers.

- Read the Lighting Masterplan. Notice important issues of reducing lamp types for simplification of maintenance, prominence of safety and security, and issues related to sustainability. Lighting appearance and lighting quality issues are very important across the campuses.

- Improve energy efficiency in all spaces using standard lamps and ballasts when possible. Follow guidelines in this Masterplan for fluorescent lamps and ballasts. When deviating from the standard, use lamps that are easily available from local electrical distributor or available through the NY state lamp list.

- Use products that are available from reputable manufacturers and have local representatives to support them. Ensure product replacements will be available for at least 6 years in case of failure or damage.

- When specifying metal halide products, only pulse-start technologies are acceptable in terms of color-consistency, lumen-maintenance, and efficiency. Use them with electronic ballasts for interior applications, and when economically feasible, for outdoors as well.

- Avoid specifying incandescent or halogen lighting because it is low in energy efficiency. (Halogen lamps are more efficient forms of incandescent.) However, recognizing that halogen may be the best choice for areas that require inexpensive dimming and excellent color, use halogen lamps judiciously only when dimming is required and/or when the optical characteristics of halogen are needed. Avoid medium-base incandescent A-lamps because they can be accidently replaced with screwbase CFL by maintenance staff. Halogen MR16 lamps may be acceptable because they are more energy-effective than conventional incandescent, and use a pin-base that cannot be retrofitted with CFL. (In future, LED replacement lamps for MR16s may reach an acceptable color point, cost point, dimmability without flicker, and equivalent light output to halogen MR16s, but at the time of this writing they are a ways off.)

- When designing/engineering new or gut-remodel spaces, use a target of 25 to 30% below New York State energy code Lumen Power Density levels.

- When designing/engineering existing spaces, especially with historic preservation considerations, it is more difficult to reduce lighting power while still maintaining quality. Target LPDs that are at or below those allowed by the NYS energy code. Specify controls to dim or extinguish lights when useful daylight is available, and sensors to shut off lighting when the space is unoccupied.

- Try to avoid dimming of fluorescent and MH because it's expensive and poses a maintenance complexity. However, dimming may be needed for the Performing Arts Center or special lecture halls or the Ballroom, for example. Use technologies that allow dimming down to less than 4% of output, that restrike at the low level rather than striking at a higher level and dimming down to that level (Lutron HiLume or equivalent).

- Provide 3-name specification for multiple bidding options whenever possible, and supply detailed performance specification and cost allowance for product if sole-source product is specified.

- Detailed design documents should include lighting plans, precise specifications with complete product numbers or description that includes color, finish, endcaps, specific ballast type, Ballast Factor, THD, starting method, lamp color (super T8), suspension method, number of circuits, mounting height, number of lamps, finish of cone or trim, optical characteristics including minimum fixture efficiency and optical light distribution, lens type or baffle options and thickness, housing materials, housing depth, glass finish, size, dimming options, canopy options, etc.

- Avoid materials that have toxic implications either in manufacture or in use, such as polystyrene, polycarbonate, or PVC.

- Work with U Albany electrical and maintenance staff to identify available control circuits.

- Integrate emergency lighting into the architectural luminaires using emergency backup circuits or emergency ballasts, as available. Avoid use of bug-eye emergency wallpacks because they are unsightly.

- Design workspaces with light fixtures that minimize direct glare and reflected glare on computer screens. Reference IESNA Recommended Practice 1 (RP-1) for guidelines on lighting for spaces with computer screens.

- Locate fixtures and remote ballasts and remote power supplies so that they are easily reached and maintained by maintenance staff. Consider a lowering device for difficult-to-access areas, or building in lift access in rare occasions.

- Fluorescent and HID lamps shall be recycled in accordance with University policy.

Lamps

- In general, linear fluorescent lamps shall be 4' long 32W T8 rapid start, premium (or "Super T8") types, with 3500K color temperature and CRI of 85 or higher. Average rated life shall be 24,000 hours or more. Lumen maintenance at end of rated life shall be 90% or greater. Mercury content shall be low, and the lamp shall be designed to satisfy the TCLP criteria for non-hazardous waste.

- Avoid using low-output lamps (such as 28W "energy-saving" T8 fluorescent lamps) because they are easily confused with higher output lamps. If you need to reduce the output of a fixture, consider instead a low output ballast (low Ballast Factor of 0.77, for example) in combination with a full wattage lamp.

- Avoid U-lamps because they are expensive and difficult to procure.

- Avoid T5 fluorescent lamps because they are expensive and less efficient than T8 premium lamps. However, T5HO lamps may have optical advantages for some fixture types. In the interest of reducing the number of different lamp types that need to be stocked on campus, use these lamps only when there are compelling reasons. Do NOT use T5 and T5HO lamps on the same project, since the lamps appear identical and could easily be mixed up and mounted in the wrong sockets.

- Screwbase compact fluorescent lamps shall not be specified for new installations because they contain twice the mercury of an equivalent pin-based compact fluorescent lamp. All screwbase CFLs shall meet all EPA Energy Star requirements in order to ensure high quality, acceptable color quality, and lamp life. Do not specify dimmable screwbase compact fluorescent lamps because they can be relamped with non-dimming versions that will fail prematurely.

- Dedicated compact fluorescent lamps shall be electronically-ballasted four-pin lamps. 18W quad, 26W triple, and 32W triple-tube lamps shall comprise the bulk of the lamps specified because of their common availability and robustness. 18W, 27W, 39W, 40W, and 50W T5 twin-tube lamps also exhibit similar reliability and efficiency. Color shall be 3500K and minimum CRI of 80. Lamp life shall be 10,000 hours or greater.

- If using new technologies, such as LEDs, ensure that the color matches 3500K used in the rest of the campus, that the products do not flicker (i.e. operates at >500 Hz), and that if dimmed, uses a dimming technology that does not introduce flicker. This is because flicker is one of the triggers for headaches. Target 50 LPW or greater for LED products.

Ballasts and Power Supplies

- All ballasts for linear fluorescent lamps shall be programmed-start high-efficiency electronic ballasts, Advance "Optanium" or equivalent by Universal, GE, or OsramSylvania. This preserves lamp life in frequent switching applications as well as providing standard light output with low input Watts.

- All ballasts shall be high power factor, 10% THD or less.

- Ballasts for compact fluorescent ballasts shall be electronic with built-in EOL (end-of-life) protection.

- Ballasts for interior HID fixtures shall be electronic, or if not available, mounted remotely with isolated pads to minimize noise. Ballasts used outdoors may be magnetic, rated for starting at minus 10° F. Specify high ambient temperature ballasts if they are to be mounted in high ambient temperature locations or in direct sunlight.

Light Fixtures

- Check with University Facilities Staff to verify voltage before specifying fixtures.

- Specify "Specification Grade" quality or better, with UL or ETL Listing and labeling. Avoid unproven fixtures unless the University is aware of potential problems and how to support to fix those problems.

- Specify lighting products and systems with a minimum of two manufacturers specified per fixture. Single name specifications can result in higher cost and unequal fixture packaging. Any sole-source item should be called out for separate pricing to the designer and owner, so that its cost is clear and is not wrapped into "package pricing."

- Provide fixtures that are among the top 25% of efficiency in its class of fixture type. See the *Advanced Lighting Guidelines* Luminaires Chapter for these recommended efficiencies. (see www.newbuildingsinstitute.org)

- Specify fixtures that resist dirt collection and infiltration of moisture and particulates wherever possible. Exterior fixtures should have an Ingress Protection rating of 65 or better (IP65).

- Light fixtures should not produce light leaks or stray light.

- Recessed light fixtures should be thermally protected.

- Compact fluorescent fixtures used outdoors should be sealed or lensed so that they retain enough heat to produce 75% of the rated lumen output or better.

Design Criteria

- Design lighting so that the ratio of average illuminances between adjacent spaces does not exceed 10:1.

- Consider the lighting quality issues listed and described in IESNA Lighting Handbook 2000 or later, or IES Design Guide 18: Light + Quality. This includes criteria for interior and exterior lighting such as glare, flicker, facial modeling, reflected glare, task visibility, etc.

- Avoid fiberoptic lighting systems due to their low efficiency, high cost, and complex installation. If proposing a fiberoptic lighting system for a very specialized application, clear this in writing with the University.

- Locate fixtures and ballasts and control systems so that they are reachable by ladder for maintenance. Alternatively, specify a lowering device or clear the availability and use of a motorized lift with the University for access. (See www.jrclancy.com for reliable motorized winch options.)

- Ceiling mounted fixtures shall be located so that their lenses can be removed without needing to remove adjacent electrical or mechanical equipment.

Ballasts and Power Supplies

- Ballast efficiencies should be in the top 10% of available products. No magnetic ballasts should be specified for indoor use.

- Ballasts for 4' linear fluorescent lamps shall be Programmed Rapid Start (also called "pro-start" or "programmed start"), Philips "Optanium" or equivalent (55W for two 32W T8 lamps at BF=0.87). Minimum starting temperature shall be 0 degrees Fahrenheit.

- Ballasts for compact fluorescent lamps shall be electronic and have built in end-of-life protection. If mounted outdoors, ballasts shall be capable of -5 degrees F starting.

- HID ballasts shall be electronic for interior applications where noise is a consideration. This also eliminates flicker. If remote-mounting ballasts, be mindful of not exceeding distances between ignitor and lamp.

- HID ballasts for outdoor use shall be rated for -20F starting temperatures. If mounted in direct sunlight, ballast must be rated for high ambient temperatures as well.

Lighting Controls

- Provide local controls for interior spaces, except in corridors and lobbies. No panel-switching is allowed.

- Provide occupancy sensors in classrooms, offices, laboratories, storage rooms, toilet rooms, custodial closets, and similar spaces that will shut off lighting when the space is unoccupied. Use dual-technology or ultrasonic sensors in restrooms or closets or other spaces where there may be obstructions between the sensor and possible occupant locations. All occupancy sensors should have adjustable sensitivity and time delay.

- Classrooms, auditoriums, and conference rooms shall have multiple controls to allow reducing lighting for projection presentations, including emergency lighting. All controls shall be capable of being shut off by the room occupancy sensor.

- When fixtures are wired for multiple-level switching, wire lamps in tandem so that one row of lamps in each fixture can be switched off separately, rather than switching off every other fixture.

- In rooms with a significant daylighting component, lighting should be run parallel to the window wall so that daylight sensors can switch off or dim a single row of lights.

- In buildings with skylights or atriums, consider using photosensors to dim lighting near the daylight openings. Calculate the potential energy savings from daylight dimming before specifying it. Simple paybacks of 5 years or more may not justify the initial cost.

Designers and engineers shall include punchlist visits in their scope of services so that they can return after installation is substantially complete to observe the construction and produce a written report to document where the installation varies from the design documentation. The University will transmit this document to the contractor in time for the corrections to be made, at no cost to the Owner.

5.3 COMMISSIONING

Check that all installed fixtures are clean and installed at the specified mounting heights.

Check that lamping is correct in terms of lamp wattage, lamp type, color, base type. Read lamp designation from bulb (printed on end of fluorescent lamp, or on the base of a compact fluorescent lamp, or on the reflector or glass envelope of an HID lamp, or on the base of a halogen bulb). Even if it screws into the same socket, it is not necessarily the correct lamp.

Check that controls are located as specified, and function as designed. For example, if fluorescent lamps flicker or flash or appear slow to start or unstable, there may need to be an interface between the control and ballasts, for example.

Check that light levels are as designed. The lighting designer or engineer may be called in to provide a calibrated illuminance (light) meter.

Check that aimable lighting is pointed at the intended room features. The lighting designer may need to be involved to “focus” the lighting, ensuring the proper lamp wattage, beam spreads, and aiming is in place to achieve the best visual effect. Lights should not be glaring from normal viewing angles.

Keep record of fixture type, lamping, ballast type, so that replacements can be ordered if needed. Keep reserve of unusual lamp types so that they can be quickly replaced if one should fail.

If you have questions about why a product was used, or why a less expensive technique was specified, please ask for information so that you understand the design intent.

Instruct maintenance staff to replace lamps with the same bulb type. Important: Replace incandescent or halogen lamps with incandescent or halogen lamps where dimming is required, because most compact fluorescent or LED retrofit products are incompatible with installed dimming systems. Replace dimming fluorescent lamps with “seasoned” lamps, or operate at full output for 48 hours before dimming in order to season the lamps.

5.4 GUIDELINES FOR CONTRACTORS

Bidding and ordering of products

- Refer to Electrical Lighting Specification, Section 16510 from Electrical Engineer or Lighting Designer.
- Review lighting fixture schedule, dimming schedule and dimming specifications. Read all fixture descriptions in addition to product catalog numbers, because the catalog number may not reflect all option selections. Communicate both numbers and descriptions to distributor and lighting representatives for accurate bidding.
- Competing lighting and controls products may look similar, but perform very differently in terms of light pattern, glare, appearance, durability, ease of installation, ease of maintenance, etc. Provide specified product, or read detailed performance specification for direction on acceptable product for each light fixture type.
- Lamps also may look similar but perform differently over the long term, or exhibit very different warranty support. Respect lamp specifications and be wary of less expensive substitutions. Color, durability, or optical characteristics may be drastically different.

Submittal drawings

- Refer to Electrical Lighting Specification, Section 16510 from Electrical Engineer or Lighting Designer.

Installation

- Work shall comply with all applicable local electrical and building codes.
- Consult with University on materials to be preserved or salvaged from job site. The University has many valuable historic lighting fixtures that should be refurbished or stored. These should be carefully removed from the job site in order to minimize further damage and deterioration.
- Wherever possible, reuse materials from demolition in construction, provided they do not introduce hazards to the jobsite.
- Fixtures shall be supported from building structural members using angle iron, steel channel, or rod supports. The supports shall be strong enough to ensure fixtures will not drop or deform during the life of the installation.
- Recessed fluorescent fixtures shall be supported independently of suspended (T-bar) ceilings using safety wires. Removable T-bar clips shall not be used to attach fixtures to the ceiling grid.
- Fixtures shall be installed level, with no gaps between adjacent fixtures or adjacent fixtures and surrounding surfaces. Lenses, louvers, reflectors, and trims of fixtures shall be securely and uniformly installed.
- Install fixtures so that they are easily maintained and relamped. Notify University at Albany immediately if fixtures cannot be maintained after installation so that modifications can be made before Contractor is off the job.

- Recessed fixtures shall be installed with sufficient flexible conduit so that they can be removed from the ceiling and lowered 12” below the ceiling for maintenance. Locate junction boxes that service recessed fixtures within 12” of the fixture opening.
- On fluorescent dimming circuits, operate all fluorescent lamps for 48 hours at full output before dimming. If fluorescent lamps show any instability when dimmed at the end of this “burn-in” period, operate them at full output for an additional 48 hours.
- Any fixtures used during the construction period for work light should be newly lamped before turning project back over to the University.
- Fixtures shall be thoroughly cleaned and aligned before the building or area will be accepted by the University at Albany.
- Provide owner training on the proper relamping and cleaning method for each type of fixture.

Additional Lamps for Stock

- Provide owner with 10% additional lamps for each fixture type for replacement purposes.

Recycling

- Consult University on recycling of materials demolished from job site such as plastics, cardboard, and metals.

5.5 Cost Estimate and Energy Efficiency Savings

The following spreadsheets reflect an estimate of the equipment cost of implementing the Lighting Masterplan changes. They are based on the following assumptions:

- "Budget cost" of the lighting equipment is roughly the cost that the University would pay to purchase the equipment from an Electrical Distributor. It is based on the manufacturer's Distributor Cost, plus a 25% markup. Lamps are included, with a price based on the New York State purchase agreement with General Electric for lamps.
- No labor cost is included because the University at Albany may have its own facilities staff perform the maintenance and installation work, or may subcontract the work. This will affect the labor rates and hours needed, so the labor cost should be estimated by the University when the implementation method is known.

Also attached is an estimate of expected energy savings from the recommended changes. In many cases there is more than one option for the lighting change, and there are two corresponding payback analyses. Assumptions for the base case are listed in one column. Assumed hours of operation are listed in another column, both for 6am to 6pm hours and 6pm to 6am hours, because the electric rates are different day and night. The melded rate from 6am to 6pm is 10.5c per kWh; 9.5c per kWh from 6pm to 6am.

Space Name	Area or Length	SF or LF or Unit	Fixture Type	Watts per Fixture	# Fixt's	Cost per Fixture	Total Cost Per SF, LF, or Unit	Track or Wall LF	Total Cost for area	Exist. W/sf or W/lf	Design (Target)Power Density W/sf or W/lf	Potential Power Saving W/sf or W/lf	Existing Watts per Fixture	Existing # Fixtures	Existing Watts	Design Watts	Power Savings Watts	NYS CODE Max W/sf or LF	NYS CODE UNITS
Note: Costs are approximate end user costs for equipment only and do not include labor, controls, wiring. Prices will vary depending on quantity and purchase method.																			
Uptown Exterior																			
Historic Fixtures																			
Box Lights	20	LF	S1	90	1	$600	$30.00		$600	7.50	4.50	**3.00**	150		150	90	**60**	5.00	LF
Saucer Lights	400	SF	Q2	180	1	$10,000	$25.00		$10,000	1.33	0.45	**0.88**	530		530	180	**350**	1.25	SF
Typical Spaces																			
Perimeter Roadways	200	LF	P3	295	1	$1,970	$9.85		**$1,970**	0.25	0.15	**0.10**	490		490	295	**195**	0.15	SF
Parking Lots	6500	SF	P4	295	1	$2,037	$0.31		**$2,037**	0.08	0.05	**0.03**	495		495	295	**200**	0.15	SF
Roadway / Pedestrian areas near podium	65	LF	P2	180	1	$3,153	$48.51		**$3,153**	0.75	0.28	**0.48**	490		490	180	**310**	0.20	SF
Pathways between Academic Areas and Dormitories	60	LF	P1	85	1	$3,023	$50.38		**$3,023**	0.82	0.14	**0.68**	490		490	85	**405**	0.20	SF
Canopy Downlights	40	LF	X1	85	36	$469	$421.88		**$16,875**	0.03	0.01	**0.03**	490		17640	3060	**14580**	1.25	SF
Specific Spaces																			
Center Podium Plaza																			
Canopy Downlight	136800	SF	X1	85	36	$469	$0.12		$16,875	0.04	0.02	0.02	150		5400	3060	2340	1.25	SF
Post Top Fixture	11070	SF	P1	85	4	$3,023	$1.09		$12,092	0.05	0.03	0.02	150		600	340	260	0.20	SF
Recessed downlight under planter edge	9657	SF	D3	12	50	$75	$0.39		$3,750	0.31	0.06	0.25	60		3000	600	2400	0.20	SF
LED strips under planter	68210	SF	L9	2	1728	$50	$1.27	verify	$86,400	0.00	0.05	-0.05			0	3456	-3456	0.20	SF
TOTAL									**$119,117**			**0.24**					**1544**		
Fountain																			
Fountain lighting	16896	SF	Z1	60	40	$2,475	$5.86		$99,000	1.18	0.14	1.04	500		20000	2400	17600	0.20	SF
Tower lighting	16986	SF	Z2	40	32	$1,050	$1.98		$33,600	0.94	0.08	0.87	500		16000	1280	14720	0.20	SF
TOTAL									**$132,600**			**1.91**					**32320**		
Sportsfields - Field hockey + La.						Field total													
Musco - includes wiring and installation.	149352	SF	Musco	1500	1	$800,000	$5.36		**$800,000**		0.01	**0.00**	1500		1500	1500	0	NA	
OR: Softlite - includes wiring and installation.	149352	SF	Softlite	1500	1	$500,000	$3.35		**$500,000**		0.01	**0.00**	1500		1500	1500	0	NA	
Dormitory Quads, Health Center, and Service Buildings																			
Box Lights	20	LF	S2	45	1	$400	$20.00	20	**$400**	0.75	0.23	**0.53**	150		150	45	**105**	5.00	LF
Wallpack Replacements																			
Wall mount - Type S9	1	Unit	S9	35	1	$376	$376.00		**$376**				65		65	35	30	5.00	LF
Wall mount - Type S10	1	Unit	S10	80	1	$485	$485.00		**$485**				135		135	80	55	5.00	LF
Wall mount - Type S11	1	Unit	S11	166	1	$503	$503.00		**$503**				185		185	166	19	5.00	LF
TOTAL				94	42			10120		0.01	0.01	**0.00**	128		5376	3934	**1442**	5.00	LF

Space Name	Area or Length	SF or LF or Unit	Fixture Type	Watts per Fixture	# Fixt's	Cost per Fixture	Total Cost Per SF, LF, or Unit	Track or Wall LF	Total Cost for area	Exist. W/sf or W/lf	Design (Target)Power Density W/sf or W/lf	Potential Power Saving W/sf or W/lf	Existing Watts per Fixture	Existing # Fixtures	Existing Watts	Design Watts	Power Savings Watts	NYS CODE Max W/sf or LF	NYS CODE UNITS
Uptown Interior																			
Historic Fixtures																			
Standard Saucer	56930	SF	Q1	547	115	$5,125	$589,375.00		**$589,375**	0.01	0.01	**0.00**	530		60950	62905	**-1955**	1.30	SF
Large Saucer	8550	SF	Q3	639	12	$15,625	$187,500.00		**$187,500**	0.12	0.07	**0.04**	1017		12204	7668	**4536**	1.30	SF
Palm Light - No Change Recommended												**0.00**			0	0	0	NA	
Typical Space Types																			
Vestibules	12	SF	D1	12	1	$268	$22.33		**$268**	5.42	1.00	**4.42**	65		65	12	**53**	1.30	SF
Typical Academic Building Lobby 1	591	SF	F2	59	6	$269	$2.73		**$1,614**	0.66	0.60	**0.06**	65		390	354	**36**	1.00	SF
Typical Academic Building Lobby 2	322	SF	F2	59	4	$372	$4.62		**$1,488**	0.81	0.73	**0.07**	65		260	236	**24**	1.00	SF
Medium classroom (20'x25')	500	SF	L8	59	12	$372	$8.93		**$4,464**	1.56	1.42	**0.14**	65		780	708	**72**	1.40	SF
Large classroom (30'x30')	900	SF	L8	59	24	$372	$9.92		**$8,928**	1.73	1.57	**0.16**	65		1560	1416	**144**	1.40	SF
Science laboratory (30'x40')	1200	SF	L8	59	36	$372	$11.16		**$13,392**	1.95	1.77	**0.18**	65		2340	2124	**216**	1.40	SF
Seminar room	200	SF	L8	59	4	$372	$7.44		**$1,488**	1.30	1.18	**0.12**	65		260	236	**24**	1.40	SF
Large Lecture Hall - *Remodel of Entire Space Recommended*																			
Corridors: Parallel Layout	12	LF	F2	59	1	$268	$22.33		**$268**	0.54	0.49	**0.05**	65		65	59	**6**	0.50	SF
Corridors: Perpendicular Layout	12	LF	F2	59	1	$268	$22.33		**$268**	0.54	0.49	**0.05**	65		65	59	**6**	0.50	SF
Corridors: Narrow Layout	10	LF	F1	30	1	$261	$26.10		**$261**	0.65	0.30	**0.35**	65		65	30	**35**	0.50	SF
Administrative Office (8'x10')	80	SF	F1	30	2	$261	$6.53		**$522**	1.63	0.75	**0.88**	65		130	60	**70**	1.10	SF
Academic Office 1 (12'x20')	240	SF	L8	59	4	$372	$6.20		**$1,488**	1.08	0.98	**0.10**	65		260	236	**24**	1.10	SF
Academic Office 2 (10'x12')	120	SF	L8	59	2	$372	$6.20		**$744**	1.08	0.98	**0.10**	65		130	118	**12**	1.10	SF
Dorm Corridor	12	LF	F1	30	1	$261	$21.75		**$261**	0.50	0.25	**0.25**	60		60	30	**30**	0.50	SF
Dorm Room	130	SF	C1	59	1	$300	$2.31		**$300**	0.96	0.45	**0.51**	125		125	59	**66**	1.10	SF
Dorm Entrance Lobby																			
Downlight - Type D2	890	SF	D2	35	12	$205	$2.76		**$2,460**	0.81	0.47		60		720	420	300		
Wall sconce - Type S4	890	SF	S4	28	3	$300	$1.01		**$900**	0.22	0.09		65		195	84	111		
Wall washer - Type W1	890	SF	W1	30	5	$257	$1.44		**$1,285**	0.37	0.17		65		325	150	175		
Wall washer - Type W2	890	SF	W2	35	2	$260	$0.58		**$520**	0.15	0.08		65		130	70	60		
TOTAL Dorm Entrance Lobby	890	SF		33	22					1.54	0.81	**0.73**	64		1408	724	**684**	1.30	SF

Space Name	Area or Length	SF or LF or Unit	Fixture Type	Watts per Fixture	# Fixt's	Cost per Fixture	Total Cost Per SF, LF, or Unit	Track or Wall LF	Total Cost for area	Exist. W/sf or W/lf	Design (Target)Power Density W/sf or W/lf	Potential Power Saving W/sf or W/lf	Existing Watts per Fixture	Existing # Fixtures	Existing Watts	Design Watts	Power Savings Watts	NYS CODE Max W/sf or LF	NYS CODE UNITS
Specific Spaces																			
Campus Center Lobby																			
Wall mount	1600	SF	J1	30	3	$475	$0.89		$1,425	WHAT?	0.06				0	90	-90		
Decorative pendant	1600	SF	Q3	639	1	$15,625	$9.77		$15,625		0.40				0	639	-639		
Wall sconce	1600	SF	S3	90	12	$600	$4.50		$7,200		0.68				0	1080	-1080		
TOTAL	1600	SF							**$24,250**		1.13	**-1.13**						1.30	SF
PAC Lobby																			
Decorative pendant	4800	SF	Q4	703	3	$5,375	$3.36		$16,125		0.44				0	2109	-2109		
Downlight	4800	SF	D1	12	48	$75	$0.75		$3,600	0.15	0.12		60		2880	576	2304		
TOTAL	4800	SF							**$19,725**	0.15	0.56	**-0.41**			2880	2685	**195**	1.30	SF
Performing Arts Center - *Remodel of Entire Space Recommended*																			
Dining Center - Campus Center - *Remodel of Entire Space Recommended*																		0.9-1.2	SF
Gymnasium Existing Fixture Retrofit	20160	SF	Q5	452	82	$150	$0.61		**$12,300**		1.84	**-1.84**			0	37064	-37064	0.90	SF
Gymnasium Fixture Replacement	20160	SF	Q6	372	82	$450	$1.83		**$36,900**		1.50	**-1.50**			0	30504	-30504	0.90	SF
TOTAL of Maximum option	20160	SF									1.84	**-1.50**						0.90	SF
Administrative Offices - Student Financial Services																			
Linear fluorescent : "Plus" pattern	2400	SF	L1	59	11	$1,810	$8.30		$19,910						0	649	-649		
Linear fluorescent : L-shaped configuration	2400	SF	L2	59	0	$1,138	$0.00		$0						0	0	0		
Linear fluorescent : Straight run	2400	SF	L3	59	2	$672	$0.56		$1,344						0	118	-118		
Linear fluorescent : T-shaped configuration	2400	SF	L4	330	0	$1,474	$0.00		$0						0	0	0		
Linear fluorescent : 8' long wall-mounted straight run	2400	SF	L5	55	2	$418	$0.35		$836						0	110	-110		
Linear fluorescent : 4' long wall-mounted straight run	2400	SF	L6	31	0	$301	$0.00		$0						0	0	0		
TOTAL	2400	SF		50.6	15				**$22,090**	0.41	0.32	**0.09**			0	759	-759	1.10	SF
Campus Center Ballroom																			
Pendant	7200	SF	Q4	703	10	$5,375	$7.47		$53,750	1.41	0.98	**0.43**	706	10	7060	7030	30		
Linear fluorescent : Cove uplight	7200	SF	L10	59	16	$319	$0.71		$5,096	0.00	0.13	**-0.13**	0	0	0	944	-944		
Track light	7200	LF	T1	30	8	$1,532	$1.70	20	$12,256	0.00	0.67	**-0.67**	0	0	0	24000	-24000		
TOTAL	7200	SF		12774	34				**$71,102**	1.41	1.77	**-0.37**			0	434316	-434316	1.30	SF

Space Name	Area or Length	SF or LF or Unit	Fixture Type	Watts per Fixture	# Fixt's	Cost per Fixture	Total Cost Per SF, LF, or Unit	Track or Wall LF	Total Cost for area	Exist. W/sf or W/lf	Design (Target)Power Density W/sf or W/lf	Potential Power Saving W/sf or W/lf	Existing Watts per Fixture	Existing # Fixtures	Existing Watts	Design Watts	Power Savings Watts	NYS CODE Max W/sf or LF	NYS CODE UNITS
Downtown Exterior																			
Building Entrances																			
Existing decorative historic fixtures																			
Post Tops	1	Unit	P6	100	6	$8,750	$52,500.00		$52,500	900.00	600.00	**300.00**	128	3	768	600	168	30.00	LF
Pendant	1	Unit	Q8	20	7	$1,000	$7,000.00		$7,000	490.00	140.00	**350.00**	125	7	875	140	735	30.00	LF
Wall sconce	1	Unit	S12	5	7	$2,750	$19,250.00		$19,250	490.00	35.00	**455.00**	20	7	140	35	105	5.00	LF
Wall sconce	1	Unit	S13	20	4	$1,000	$4,000.00		$4,000	280.00	80.00	**200.00**	128	4	512	80	432	5.00	LF
TOTAL				36	24						855.00			24	0	855			
Walkways																			
Post Tops	60	LF	P5	180	1	$2,217	$36.95	60	$2,217	0.00	0.30		0	0	0	180	**-180**	0.15	SF
Building Mounted																			
Wallpack Replacements																			
Wall mount - Type S14	1	Unit	S14	35	1	$376	$376.00						66		66	35	**31**	5.00	LF
Wall mount - Type S15	1	Unit	S15	95	1	$484	$484.00						128		128	95	**33**	5.00	LF
Wall mount - Type S16	1	Unit	S16	180	1	$503	$503.00						295		295	180	**115**	5.00	LF
TOTAL																			
Downtown Interior																			
Typical Spaces																			
Corridor	12	LF	F2	59	1	$268	$22.33		**$268**	1.04	0.49	**0.55**	125		125	59	**66**	0.50	SF
Classroom	630	SF	L3	59	6	$672	$6.40		**$4,032**	0.62	0.56	**0.06**	65		390	354	**36**	1.40	SF
Specific Spaces																			
Page Hall *- Remodel of Entire Space Recommended*																		1.40	SF
Dewey Library																			
Pendant	6240	SF	Q7	360	8	$5,125	$6.57		$41,000	0.22	0.46	**-0.24**	1840	9	14720	2880	11840		
Wall sconce	6240	SF	S17	180	12	$750	$1.44		$9,000	0.34	0.35	**-0.01**	0	0	0	2160	-2160		
Linear stack light	6240	SF	L11	30	28	$448	$2.01		$12,544	0.79	0.13	**0.65**	0	0	0	840	-840		
TOTAL	6240	SF							**$62,544**		**0.94**	**-0.94**			14720	5880	**8840**	1.20	SF

Space Name	Area or Length	SF or LF or Unit	Fixture Type	Watts per Fixture	# Fixt's	Cost per Fixture	Total Cost Per SF, LF, or Unit	Track or Wall LF	Total Cost for area	Exist. W/sf or W/lf	Design (Target)Power Density W/sf or W/lf	Potential Power Saving W/sf or W/lf	Existing Watts per Fixture	Existing # Fixtures	Existing Watts	Design Watts	Power Savings Watts	NYS CODE Max W/sf or LF	NYS CODE UNITS
Alumni Quad Exterior																			
Walkways																			
Post Tops	60	LF	P5	85	1	$2,217	$36.95	60	$2,217	0.00	1.42	**-1.42**	128		128	85	**43**	1.00	LF
Building Mounted																			
Wallpack Replacements																			
Wall mount - Type S14	1	Units	S14	35	1	$376	$376.00	Unknown		66.00		**66.00**	66		66	35	**31**	5.00	LF
Wall mount - Type S15	1	Units	S15	95	1	$484	$484.00	Unknown		128.00		**128.00**	128		128	95	**33**	5.00	LF
Wall mount - Type S16	1	Units	S16	180	1	$503	$503.00	Unknown		295.00		**295.00**	295		295	180	**115**	5.00	LF
							(need spacing)												

LIGHT PURPLE KNOWN YELLOW IS NEEDED LIGHT BLUE ABOVE NY ALLOWED ENERGY CODE

GREEN IS BECAUSE RESULTS ARE FROM COUNTS THAT ARE NOT KNOWN

Space Name	Fixture Type	Watts per Fixture	# Fixt's	Power Savings Watts	Hours of Operation per Day 6am-6pm	Hours of Operation per Day 6pm-6am	Days per Year	Total KWH 6am-6pm	Total KWH 6pm-6am	$0.105/ KWH 6am-6pm	$0.095/ KWH 6pm-6am	$0.14/ KWH 6am-6pm	$0.13/ KWH 6pm-6am	Total Cost Savings
Note: Costs are approximate end user costs for equipment only and do not include labor, controls, wiring. Prices will vary depending on quantity and purchase method.														
Uptown Exterior														
Historic Fixtures														
Box Lights	S1	90	1	**60**	0	12	365	0	263	$0.00	$24.97			**$24.97**
Saucer Lights	Q2	180	1	**350**	12	12	365	1,533	1,533	$160.97	$145.64			**$306.60**
Typical Spaces														
Perimeter Roadways	P3	295	1	**195**	0	12	365	0	854	$0.00	$81.14			**$81.14**
Parking Lots	P4	295	1	**200**	0	12	365	0	876	$0.00	$83.22			**$83.22**
Roadway / Pedestrian areas near podium	P2	180	1	**310**	0	12	365	0	1,358	$0.00	$128.99			**$128.99**
Pathways between Academic Areas and Dormitories	P1	85	1	**405**	0	12	365	0	1,774	$0.00	$168.52			**$168.52**
Canopy Downlights	X1	85	36	**14580**	0	12	365	0	63,860	$0.00	$6,066.74			**$6,066.74**
Specific Spaces														
Center Podium Plaza														
Canopy Downlight	X1	85	36	2340	0	12	365	0	10,249	$0.00	$973.67			$973.67
Post Top Fixture	P1	85	4	260	0	12	365	0	1,139	$0.00	$108.19			$108.19
Recessed downlight under planter edge	D3	12	50	2400	0	12	365	0	10,512	$0.00	$998.64			$998.64
LED strips under planter	L9	2	1728	-3456	0	12	365	0	-15,137	$0.00	-$1,438.04			-$1,438.04
Fountain														
Fountain lighting	Z1	60	40	17600	0	4	150	0	10,560	$0.00	$1,003.20			$1,003.20
Tower lighting	Z2	40	32	14720	0	4	150	0	8,832	$0.00	$839.04			$839.04
Sportsfields - Field hockey + La.														
Musco - includes wiring and installation.	Musco	1500	1	0	0	2	140	0	0	$0.00	$0.00			**$0.00**
OR: Softlite - includes wiring and installation.	Softlite	1500	1	0				0	0	$0.00	$0.00			**$0.00**
Dormitory Quads, Health Center, and Service Buildings														
Box Lights	S2	45	1	**105**	0	12	365	0	460	$0.00	$43.69			$43.69
Wallpack Replacements								0	0	$0.00	$0.00			$0.00
Wall mount - Type S9	S9	35	1	30	0	12	365	0	131	$0.00	$12.48			$12.48
Wall mount - Type S10	S10	80	1	55	0	12	365	0	241	$0.00	$22.89			$22.89
Wall mount - Type S11	S11	166	1	19	0	12	365	0	83	$0.00	$7.91			$7.91

Space Name	Fixture Type	Watts per Fixture	# Fixt's	Power Savings Watts	Hours of Operation per Day 6am-6pm	Hours of Operation per Day 6pm-6am	Days per Year	Total KWH 6am-6pm	Total KWH 6pm-6am	$0.105/ KWH 6am-6pm	$0.095/ KWH 6pm-6am	$0.14/ KWH 6am-6pm	$0.13/ KWH 6pm-6am	Total Cost Savings
Uptown Interior														
Historic Fixtures														
Standard Saucer	Q1	547	115	**-1955**	12	12	365	-8,563	-8,563	-$899.10	-$813.48			**-$1,712.58**
Large Saucer	Q3	639	12	**4536**	12	12	365	19,868	19,868	$2,086.11	$1,887.43			**$3,973.54**
Palm Light - No Change Recommended				0	12	12	365	0	0	$0.00	$0.00			**$0.00**
Typical Space Types														
Vestibules	D1	12	1	**53**	12	12	365	232	232	$24.37	$22.05			**$46.43**
Typical Academic Building Lobby 1	F2	59	6	**36**	12	12	365	158	158	$16.56	$14.98			**$31.54**
Typical Academic Building Lobby 2	F2	59	4	**24**	12	12	365	105	105	$11.04	$9.99			**$21.02**
Medium classroom (20'x25')	L8	59	12	**72**	11	4	225	178	65	$18.71	$6.16			**$24.87**
Large classroom (30'x30')	L8	59	24	**144**	11	4	225	356	130	$37.42	$12.31			**$49.73**
Science laboratory (30'x40')	L8	59	36	**216**	11	4	225	535	194	$56.13	$18.47			**$74.60**
Seminar room	L8	59	4	**24**	11	4	225	59	22	$6.24	$2.05			**$8.29**
Large Lecture Hall - *Remodel of Entire Space Recommended*								0	0	$0.00	$0.00			**$0.00**
Corridors: Parallel Layout	F2	59	1	**6**	12	12	365	26	26	$2.76	$2.50			**$5.26**
Corridors: Perpendicular Layout	F2	59	1	**6**	12	12	365	26	26	$2.76	$2.50			**$5.26**
Corridors: Narrow Layout	F1	30	1	**35**	12	12	365	153	153	$16.10	$14.56			**$30.66**
Administrative Office (8'x10')	F1	30	2	**70**	12	0	250	210	0	$22.05	$0.00			**$22.05**
Academic Office 1 (12'x20')	L8	59	4	**24**	12	0	250	72	0	$7.56	$0.00			**$7.56**
Academic Office 2 (10'x12')	L8	59	2	**12**	12	0	250	36	0	$3.78	$0.00			**$3.78**
Dorm Corridor	F1	30	1	**30**	12	12	315	113	113	$11.91	$10.77			**$22.68**
Dorm Room	C1	59	1	**66**	3	4	315	62	83	$6.55	$7.90			**$14.45**
Dorm Entrance Lobby														
Downlight - Type D2	D2	35	12	300	12	12	315	1,134	1,134	$119.07	$107.73			$226.80
Wall sconce - Type S4	S4	28	3	111	12	12	315	420	420	$44.06	$39.86			$83.92
Wall washer - Type W1	W1	30	5	175	12	12	315	662	662	$69.46	$62.84			$132.30
Wall washer - Type W2	W2	35	2	60	12	12	315	227	227	$23.81	$21.55			$45.36

Space Name	Fixture Type	Watts per Fixture	# Fixt's	Power Savings Watts	Hours of Operation per Day 6am-6pm	Hours of Operation per Day 6pm-6am	Days per Year	Total KWH 6am-6pm	Total KWH 6pm-6am	$0.105/ KWH 6am-6pm	$0.095/ KWH 6pm-6am	$0.14/ KWH 6am-6pm	$0.13/ KWH 6pm-6am	Total Cost Savings
Specific Spaces														
Campus Center Lobby														
Wall mount	J1	30	3	-90	12	12	365	-394	-394	-$41.39	-$37.45			-$78.84
Decorative pendant	Q3	639	1	-639	12	12	365	-2,799	-2,799	-$293.88	-$265.89			-$559.76
Wall sconce	S3	90	12	-1080	12	12	365	-4,730	-4,730	-$496.69	-$449.39			-$946.08
PAC Lobby														
Decorative pendant	Q4	703	3	-2109	12	0	365	-9,237	0	-$969.93	$0.00			-$969.93
Downlight	D1	12	48	2304	12	0	365	10,092	0	$1,059.61	$0.00			$1,059.61
Performing Arts Center - *Remodel of Entire Space Recommended*								0	0	$0.00	$0.00			**$0.00**
								0	0					
Dining Center - Campus Center - *Remodel of Entire Space Recommended*								0	0	$0.00	$0.00			**$0.00**
Gymnasium Existing Fixture Retrofit	Q5	452	82	-37064				0	0	$0.00	$0.00			
Gymnasium Fixture Replacement	Q6	372	82	-30504				0	0	$0.00	$0.00			
TOTAL of Minimum option		372	82	-30504	12	5	350	-128,117	-53,382	-$13,452.26	-$5,071.29			**$0.00**
Administrative Offices - Student Financial Services								0	0	$0.00	$0.00			$0.00
Linear fluorescent : "Plus" pattern	L1	59	11	-649	12	0	250	-1,947	0	-$204.44	$0.00			-$204.44
Linear fluorescent : L-shaped configuration	L2	59	0	0	12	0	250	0	0	$0.00	$0.00			$0.00
Linear fluorescent : Straight run	L3	59	2	-118	12	0	250	-354	0	-$37.17	$0.00			-$37.17
Linear fluorescent : T-shaped configuration	L4	330	0	0	12	0	250	0	0	$0.00	$0.00			$0.00
Linear fluorescent : 8' long wall-mounted straight run	L5	55	2	-110	12	0	250	-330	0	-$34.65	$0.00			-$34.65
Linear fluorescent : 4' long wall-mounted straight run	L6	31	0	0	12	0	250	0	0	$0.00	$0.00			$0.00
Campus Center Ballroom														
Pendant	Q4	703	10	30	7	1	250	53	8	$5.51	$0.71			$6.23
Linear fluorescent : Cove uplight	L10	59	16	-944	7	1	250	-1,652	-236	-$173.46	-$22.42			-$195.88
Track light	T1	30	8	-24000	7	1	250	-42,000	-6,000	-$4,410.00	-$570.00			-$4,980.00

Space Name	Fixture Type	Watts per Fixture	# Fixt's	Power Savings Watts	Hours of Operation per Day 6am-6pm	Hours of Operation per Day 6pm-6am	Days per Year	Total KWH 6am-6pm	Total KWH 6pm-6am	$0.105/ KWH 6am-6pm	$0.095/ KWH 6pm-6am	$0.14/ KWH 6am-6pm	$0.13/ KWH 6pm-6am	Total Cost Savings
Downtown Exterior														
Building Entrances														
Existing decorative historic fixtures								0	0			$0.00	$0.00	$0.00
Post Tops	P6	100	6	168	0	12	365	0	736			$0.00	$95.66	$95.66
Pendant	Q8	20	7	735	0	12	365	0	3,219			$0.00	$418.51	$418.51
Wall sconce	S12	5	7	105	0	12	365	0	460			$0.00	$59.79	$59.79
Wall sconce	S13	20	4	432	0	12	365	0	1,892			$0.00	$245.98	$245.98
Walkways														
Post Tops	P5	180	1	**-180**	0	12	365	0	-788			$0.00	-$102.49	
Building Mounted														
Wallpack Replacements														
Wall mount - Type S14	S14	35	1	**31**	0	12	365	0	136			$0.00	$17.65	$17.65
Wall mount - Type S15	S15	95	1	**33**	0	12	365	0	145			$0.00	$18.79	$18.79
Wall mount - Type S16	S16	180	1	**115**	0	12	365	0	504			$0.00	$65.48	$65.48
Downtown Interior														
Typical Spaces														
Corridor	F2	59	1	**66**	12	9	365	289	217			$40.47	$28.19	$68.66
Classroom	L3	59	6	**36**	11	1	365	145	13			$20.24	$1.71	$21.94
Specific Spaces														
Page Hall *- Remodel of Entire Space Recommended*					2	0	210	0	0			$0.00	$0.00	$0.00
Dewey Library														
Pendant	Q7	360	8	11840	11	7	300	39,072	24,864			$5,470.08	$3,232.32	$8,702.40
Wall sconce	S17	180	12	-2160	11	7	300	-7,128	-4,536			-$997.92	-$589.68	-$1,587.60
Linear stack light	L11	30	28	-840	11	7	300	-2,772	-1,764			-$388.08	-$229.32	-$617.40

Space Name	Fixture Type	Watts per Fixture	# Fixt's	Power Savings Watts	Hours of Operation per Day 6am-6pm	Hours of Operation per Day 6pm-6am	Days per Year	Total KWH 6am-6pm	Total KWH 6pm-6am	$0.105/ KWH 6am-6pm	$0.095/ KWH 6pm-6am	$0.14/ KWH 6am-6pm	$0.13/ KWH 6pm-6am	Total Cost Savings
Alumni Quad Exterior														
Walkways														
Post Tops	P5	85	1	**43**	0	12	365	0	188			$0.00	$24.48	$24.48
Building Mounted												$0.00	$0.00	
Wallpack Replacements												$0.00	$0.00	
Wall mount - Type S14	S14	35	1	**31**	0	12	365	0	136			$0.00	$17.65	$17.65
Wall mount - Type S15	S15	95	1	**33**	0	12	365	0	145			$0.00	$18.79	$18.79
Wall mount - Type S16	S16	180	1	**115**	0	12	365	0	504			$0.00	$65.48	$65.48
TOTAL ENERGY SAVINGS														**$13,244.69**

no separate listing for rec. sports vs. intercollegiate sports (per notes)

6 MASTERPLAN LIGHTING SPECIFICATION AND FIXTURE SCHEDULE

7 LIGHTING PRODUCT INFORMATION

Fixture Type	Description	Lamps	Watts	Volt.	Manufacturer's Catalog	Notes
	NOTE: NOT ALL INFORMATION ABOUT THE LUMINAIRE IS CONTAINED IN THE CATALOG NUMBER. BE SURE TO READ ALL DESCRIPTIVE					
	INFORMATION BEFORE PRICING OR ORDERING LUMINAIRE.					
C1	Ceiling-mounted 4' long fluorescent fixture for dormitory bedrooms, with 8.5-16" width. Two T8 lamps in cross-section. Integral programmed-start ballast. White painted finish. Minimum 65% fixture efficiency. Aluminum housing with acrylic diffusers.	(2) F32T8/835/XPS	59		Prudential M7-2T8-pr'-RBL-OL-TMW-D9-SUR-X3 or Finelite S15-4'-2T8-SC-Volt-SS or H.E. Williams ASM-S-4-2T32-A-PROG.START	
D1	Retrofit LED unit to replace the lamp and fresnel lens trim of original 6" diameter recessed incandescent downlights. 3500K (neutral) light color. Integral power supply. System to produce no perceivable flicker. System efficacy minimum 54 LPW. Pewter anodized trim cone.	LEDs included	12		LED Lighting Fixtures (LLF) Inc. "LR6CP" See www.llfinc.com No known equal.	
D2	Recessed compact fluorescent downlight in dormitory lobby with 6" diameter aperture, semi-specular clear cone. Maximum depth of fixture is 6.5". Integral electronic ballast. No direct or reflected lamp image visible above a viewing angle of 45°. Minimum 60% fixture efficiency. New construction housing.	(1) CFTR32W/835	35		Kurt Versen P921-SC or equivalent by or approved equivalent by Lightolier, Cooper Portfolio or Omega	
D3	Recessed LED downlight with pewter painted vertically ribbed cone, 3500K (neutral) light color, and integral power supply. Mount within standard recessed 6" diameter downlight that is compatible with the new planter construction.		12		LED Lighting Fixtures Inc (now CREE) "LR6CP" Recessed housing: Halo H7ICATNB or H7ICTNB, H7T Or Capri CR1NB, CR1NBQP, CRR1NB, CRR1NBQP, QL1BB, QL1NBQP	Updated 8-13-08. LED Lightng Solutions, Inc. is now CREE. IES file and cut sheet in project folder.
F1	Recessed 1'x4' fluorescent "direct/indirect" troffer with louvered downlight. One T8 fluorescent lamp in cross section. Integral programmed start electronic ballast, Universal B132PUNVHP-A or equivalent. Mounting will vary according to installation, so ceiling type in catalog number has been replaced with "CLG". Minimum 60% luminaire efficiency. Minimum one-year warranty on luminaire, 3-year warranty on ballast.	(1) F32T8/835/XPS	30		Columbia STRL14-132-CLG-WCBMPO-EB-Prostart-Volt or Linear Lighting CBL14-D1ET8-PRD/PXL-CLG-BW-PSB10-4 or Lightolier PPS1-CLG-6WW132-Volt-Prostart	
F2	Recessed 2'x4' fluorescent "direct/indirect" troffer with louvered downlight. Two T8 fluorescent lamps in cross section. Integral programmed start electronic ballast, Universal B232PUNVHP-A or equivalent. Mounting will vary according to installation, so ceiling type in catalog number has been replaced with "CLG". Minimum 60% luminaire efficiency. Minimum one-year warranty on luminaire, 3-year warranty on ballast.	(2) F32T8/835/XPS	59		Columbia STRL24-232-CLG-WCBMPO-EB-Prostart-Volt or Linear Lighting CBL24-D2ET8-PRD/PXL-CLG-BW-PSB10-4 or Lightolier PPS2-CLG-6WW232-Volt-Prostart	

Naomi Miller Lighting Design
46 23rd Street
Troy NY 12180
518.272.2745

Fixture Type	Description	Lamps	Watts	Volt.	Manufacturer's Catalog	Notes
J1	Wall-mounted direct/indirect linear fluorescent fixture mounted above entrance hall doorways. Lengths 4', 8', 12', or 16', as shown on plan. One lamp in cross-section, with integral programmed start electronic ballast. Clear dust cover on upward aperture, and white painted or semi-specular parabolic baffle downward. Painted finish to be white, or as selected to match wall color.	(1) F32T8/835/XPS per 4' length	30 per 4' length		Neoray 66DIW-1T8-length-Volt-EB-Prostart-SI-Dustcover-S79-MOD with wall spacer Or equivalent by Litecontrol or Metalumen	
L1	Suspended linear fluorescent in "Plus" pattern. (4) 8' extruded aluminum indirect/direct pendants (2-lamps in cross section), all sharing special center connector. Special center connector provides normal and emergency/nightlight power. Open upward aperture, semi-specular baffle downward, with minimum luminaire efficiency of 85%.Integral electronic high-efficiency instant-start ballast with Normal Ballast Factor (BF=0.88), Advance Optanium or equivalent. Provide two circuits in some units, one for normal, second for nightlight/emergency power. Where indicated provide Integral emergency ballast that provides 1350 initial lumens from two lamps (810 after 90 minutes), Bodine B50 or equivalent. Emergency ballast to fit completely in pendant. Nominal housing dimensions of 9" wide x 3" tall. Aircraft cable suspension, white cord feed. White painted housing finish. See detail. Minimum one-year warranty on luminaire, three-year warranty on ballast.	(2) F32T8/835/XPS per 4' length	440 total		Finelite "Series 16" S16-SSL-Config-2T8-DC-91W-Open-Volt-MOD-AC-FE-Optanium. Litecontrol "LC-82" P-ID-822-length-T8-PBSSHP-CWM-Tandem-wiring-HI Effic Electronic-2CWQ with "X"-connector. Lightolier "Energos" EG2-2-BK-P-Config-Volt-W-MOD "PLUS" CONNECTOR.	
L2	Similar to L1 above, except L-shaped configuration with two 8' legs and connector. May require nightlight/emergency circuit.	(2) F32T8/835/XPS per 4' length	220 total		Finelite "Series 16" S16-SSL-config-2T8-DC-91W-Open-Volt-MOD-AC-FE-Optanium. Litecontrol "LC-82" P-ID-822-length-T8-PBSSHP-CWM-Tandem-wiring-HI Effic Electronic-2CWQ with "C90"-connector. Lightolier "Energos" EG2-2-BK-P-Config-Volt-W-MOD 90-degree Connector.	

Naomi Miller Lighting Design
46 23rd Street
Troy NY 12180
518.272.2745

Fixture Type	Description	Lamps	Watts	Volt.	Manufacturer's Catalog	Notes
L3	Similar to L1 above, except straight run. Tandem-wired for two-level switching. 24" overall suspension length.	(2) F32T8/835/XPS per 4' length	59 W per 4' length		Finelite "Series 16" S16-SSL-length-2T8-DC-91W-Open-Volt-AC-FE-Optanium. Litecontrol "LC-82" P-ID-822-length-T8-PBSSHP-CWM-Tandem-wiring-HI Effic Electronic-2CWQ. Lightolier "Energos" EG2-2-BK-P-8-Volt-W.	
L4	Similar to L1 above, except T-shaped configuration with three 8' legs and connector. May require nightlight/emergency circuit.	(2) F32T8/835/XPS per 4' length	330 total		Finelite "Series 16" S16-SSL-config-2T8-DC-91W-Open-Volt-MOD-AC-FE-Optanium Litecontrol "LC-82" P-ID-822-length-T8-PBSSHP-CWM-Tandem-wiring-HI Effic Electronic-2CWQ with "T"-connector Lightolier "Energos" EG2-2-BK-P-Config-Volt-W-MOD "T" Connector	
L5	8' long wall-mounted version of fixture type L3 above, except (1) lamp in cross section. May require nightlight/emergency circuit.	(1) F32T8/835/XPS per 4' length	55W per 8' length		Finelite "Series 16" S16WM-SSL-8'-1T8-SC-91W-Volt-FE-Optanium. Litecontrol "LC-82" W-ID-821-length-T8-PBSSHP-CWM-Hi Effic Electronic-MOD. Lightolier "Energos" EG2-1BK-P-8-Volt-W-MOD Wall Mounted.	
L6	Same as L5 above, except 4' version.	(1) F32T8/835/XPS per 4' length	31		Finelite "Series 16" S16-SSL-config-2T8-DC-91W-Open-Volt-MOD-AC-FE-Optanium. Litecontrol "LC-82" W-ID-822-length-T8-PBSSHP-CWM-Tandem-wiring-HI Effic Electronic-2CWQ with "T"-connector. Lightolier "Energos" EG2-2-BK-P-Config-Volt-W-MOD "T" Connector.	
L7	Suspended direct/indirect linear fixture with rectangular shape. Straight runs only. 4', 8', 12, or 16' runs as shown on plans. Two T8 lamps in cross-section with integral programmed start ballasts (Philips "Optanium" or equivalent.) Tandem-wiring for two-level switching. White painted housing finish. Parabolic louver downward. Minimum luminaire efficiency of 85%. Aircraft cable suspension and flat end caps.	(2) F32T8/835/XPS per 4' length	59 W or fewer per 4' length		Finelite "Series 16" S16-SSL-Length-2T8-DC-91W-Open-Volt-AC-FE-Optanium. Litecontrol "LC-82" P-ID-822-length-T8-PBSSHP-CWM-Tandem-wiring-HI Effic Electronic-2CWQ with "X"-connector. Lightolier "Energos" EG2-2-BK-P-Config-Volt-W-MOD "PLUS" CONNECTOR.	

Naomi Miller Lighting Design
46 23rd Street
Troy NY 12180
518.272.2745

Fixture Type	Description	Lamps	Watts	Volt.	Manufacturer's Catalog	Notes
L8	Suspended direct/indirect linear fixture with box shape, located primarily in office and classrooms with barrel vaults. Approximately 6" wide, 6 to 8" tall. Straight runs only. 4', 8', 12, or 16' runs as shown on plans. Two T8 lamps in cross-section with integral programmed start ballasts (Philips "Optanium" or equivalent.) Tandem-wiring for two-level switching, uplight separate from downlight. White painted housing finish. Semi-specular parabolic louver downward. Minimum luminaire efficiency of 65%. Aircraft cable suspension and flat end caps. Minimum one-year warranty on luminaire, 3 year warranty on ballast.	(2) F32T8/835/XPS per 4' length	59 W or fewer per 4' length		Neoray 14DIP-1-1-T8-27-SC-Length-Volt-Prostart-S79 or Prudential P-69-1T8/1T8-Length-Semispecular Parabolic Louver-TMW-D3-DC-Volt-CA48-X3-Prostart or Alera MS6-1U1D-T8-CM-48-LD-Prostart-Volt-Length-U/B	
L9	Linear LED strips rated for wet location outdoor use. Located in strips under benches on podium. See detail. Wet location power supply, connectors, mounting channel, and screws as required for continuous runs with corners. Mounting channel must conceal view of lamps. Comes in lengths of 3.2 feet each.	Included	LED 6 Watts per 3.2 linear foot section		Osram Sylvania "Linearlight Multi Flex" LLMULTIFLX/THN/W3-827-3.2FT with Power supply and mounting channel and screws as required. Or equivalent by International Light Technologies	No photometry or heat sink on this product. Searching for a replacement. Will use ColorKinetics LED eW Graze Powercore for AGI calc. IES file and cut sheet in project folder.
L10	8' long fluorescent cove uplight with asymmetrical distribution for Ball Room. One T8 lamp in cross-section, and integral programmed start electronic ballast. Steel housing, painted white, mounted on concrete "shelf" at edge of decorative ceiling detail. See detail. Housing 8" wide x 3" tall, maximum. Main beam of light aimed toward center of coffer. Minimum fixture efficiency of 63%.	(2) F32T8/XPS/835 per 8' length	118W per 8' length		Cooper Neoray 74-IC-1T8-8'-Volt-EB-ProgStart-SI Or equivalent by Litecontrol or Lightolier	
L11	4' or 8' long T8 fluorescent stack light, running parallel to bookstack aisle. Mount top of fixture to horizontal structural member. Fixture may be hard-wired or provided with a cord-and-plug if receptacle is mounted nearby. One lamp in cross section. Programmed-start electronic ballast. Bronze painted housing finish, or as selected by owner. Blade baffle 1" high x 1" o.c..	(1) F32T8/XPS/835 per 4' length	30W per 4' length		Stack light by Elliptipar, Litecontrol, or Focal Point, as selected by owner. TBD.	

Naomi Miller Lighting Design
46 23rd Street
Troy NY 12180
518.272.2745

Fixture Type	Description	Lamps	Watts	Volt.	Manufacturer's Catalog	Notes
L12	4', 8', 12', 16', 20', or 24' long direct/indirect fluorescent fixture for classrooms. Three T8 lamps in cross-section, outer lamps on separate switch circuit than inner lamp. (All three lamps are never switched on at the same time.) Lamps tandem-wired to minimize number of ballasts required. Center lamp has reflector to direct light downward only. Outer two lamps direct light up and down. Parabolic baffle on downward side with minimum 30 degree lengthwise shielding. Housing is extruded aluminum, approximately 2-3" tall x 8-10" wide, with standard painted finish as selected by University. Integral programmed-start ballasts, Philips Optanium or equivalent. Center lamp operation only minimum fixture efficiency 48%, outer lamp only minimum fixture efficiency 75% efficiency.	(3) F32T8/XPS/835 per 4' length	Allow 89 W per 4' length for circuiting but max load will be 59W per 4' length		Finelite "Series 16" S16-SSL-length-3T8-DC-91W-CCO-Volt-AC-FE-Optanium. Litecontrol "LC-82" P-ID-8234-T8-PBSSHP-CWM-Tandem-wiring-ProgStart Electronic-2CWQ-Center lamp optics. Lightolier "Energos" EG2-3-BK-P-8-Volt-W-Center lamp optics.	
P1	Post top walkway fixture, located along walkways or on podium level, near stairs to fountain. Single post-top fixture mounted on 12' pole on 17" tall transformer base, IES Type III distribution, flat lens and optics for Full Cutoff. The fixture has a slipfitter that fits over a 3" O.D. tenon. Integral pulse-start magnetic ballast for 70W ceramic halide lamp. Pole shall be 12' tall with 8-9" diameter bolt circle at base. Tapered composite pole shaft with base cover, with woven fiberglass reinforcing. Smooth finish, painted dark bronze to match fixture. Pole shall have minimum 2.5" x 5" handhole with aluminum door and vandal-resistant screws. Transformer base shall be 17" tall x 13-14" square, breakaway design, with hinged door 9-10" x 11-12" high. Made of 356 T-6 aluminum alloy with stainless steel wheelabrated finish, with 10 to 12" diameter bottom bolt circle and modified for 8-9" diameter bolt circle at top. Bronze painted finish to match pole and fixture. Must meet all AASHTO requirements.	(1) CMH70/U/830/MED/O	Allow 85		**Fixture:** Cooper Lighting (Invue "Mesa") MSA-70W-MP-Voltage-3S-FG-BZ Or Se'lux "Quadro" QH2-R2-1-H070-BZ-Volt-Pole fitter **Pole:** Whatley RT34-12-DBZ-AB-30-Tenon height or PLP A312T-5-S1-HO **Transformer base:** UTMT TB2-17-MOD 10-12"BBC+ 8-9"TBC or ULS TB2-17-MOD 10-12"BBC+ 8-9"TBC	

Naomi Miller Lighting Design
46 23rd Street
Troy NY 12180
518.272.2745

Fixture Type	Description	Lamps	Watts	Volt.	Manufacturer's Catalog	Notes
P2	Single post-top fixture mounted on 14' pole on 17" tall transformer base, IES Type III distribution, flat lens and optics for Full Cutoff. Located at mixed pedestrian and roadway areas near podium. Integral magnetic ballast with quick-disconnect plugs. Minimum IP65 rating. Pole shall be 14' tall with 8-9" diameter bolt circle at base. Tapered composite pole shaft with base cover, with woven fiberglass reinforcing. Smooth finish, painted dark bronze to match fixture. Pole shall have minimum 2.5" x 5" handhole with aluminum door and vandal-resistant screws. Transformer base shall be 17" tall x 13-14" square, breakaway design, with hinged door 9-10" x 11-12" high. Made of 356 T-6 aluminum alloy with stainless steel wheelabrated finish, with 10 to 12" diameter bottom bolt circle and modified for 8-9" diameter bolt circle at top. Bronze painted finish to match pole and fixture. Must meet all AASHTO requirements.	(1) CMH150/U/830/MED/O	180		**Fixture:** Cooper Lighting (Invue "Mesa") MSA-150W-MP-Voltage-3S-FG-BZ or Se'lux "Quadro" QH2-R2-1-H150-BZ-Volt-Pole fitter **Pole:** Whatley RT34-14-DBZ-AB-30-Tenon height or PLP A314T-5-S1-HO **Transformer base:** UTMT TB2-17-MOD 10-12"BBC+ 8-9"TBC or ULS TB2-17-MOD 10-12"BBC+ 8-9"TBC	

Naomi Miller Lighting Design
46 23rd Street
Troy NY 12180
518.272.2745

Fixture Type	Description	Lamps	Watts	Volt.	Manufacturer's Catalog	Notes
P3	Single post-top fixture on arm mounted to 25' pole on 17" tall transformer base. 250W pulse-start metal halide lamp, vertical lamp optical system, IES Type III distribution, flat lens and optics for Full Cutoff. Integral magnetic ballast with quick disconnect plugs. Minimum IP65 rating. Dieformed aluminum housing with TGIC Polyester powdercoat paint finish in bronze color. Extruded aluminum mitred doorframe with memory-retentive hollow section silicone rubber to seal door from insects and moisture. Stainless steel springs on doorway provide toolless entry. Minimum one-year warranty on luminaire, three-year warranty on ballast. Minimum optical efficiency of 72%, with maximum luminous intensity no less than 10 times nadir intensity. Less than 0.7% luminaire lumens shall be emitted between 80 and 90 degrees above nadir. Minimum one-year warranty on fixture, three-year warranty on ballast. Pole shall be 25' tall with 10 to 12" diameter bolt circle at base. Tapered composite pole shaft with base cover, with woven fiberglass reinforcing. Smooth finish, painted dark bronze to match fixture. Pole shall have minimum 2.5" x 5" handhole with aluminum door and vandal-resistant screws. Transformer base shall be 17" tall x 13-14" square, breakaway design, with hinged door 9-10" x 11-12" high. Made of 356 T-6 aluminum alloy with stainless steel wheelabrated finish, with 10 to 12" diameter bolt circle at top and bottom. Bronze painted finish to match pole and fixture. Must meet all AASHTO requirements.	(1) MVR250/VBU/PA	295		**Fixture:** Gardco HPV23-1-3XVF-250PSMH-Voltage-BRP. **Pole:** Whatley RT34-25-DBZ-AB-SMS-DTC or PLP A525T-3-S1-HO **Transformer base:** United Lighting Standards TB2-17 or UTMT TB2-17	

Naomi Miller Lighting Design
46 23rd Street
Troy NY 12180
518.272.2745

Fixture Type	Description	Lamps	Watts	Volt.	Manufacturer's Catalog	Notes
P4	Single fixture, arm mounted to 25' pole on 17" tall transformer base. Vertical lamp optical system, IES Type V distribution, flat lens and optics for Full Cutoff. Integral 250W pulse-start magnetic ballast and ignitor with quick-disconnect plugs. Minimum IP65 rating. Dieformed aluminum housing with TGIC Polyester powdercoat paint finish in bronze color. Extruded aluminum mitred doorframe with memory-retentive hollow section silicone rubber to seal door from insects and moisture. Stainless steel springs on doorway provide toolless entry. Minimum one-year warranty on luminaire, three-year warranty on ballast. Minimum optical efficiency of 72%, with maximum luminous intensity no less than 10 times nadir intensity. Less than 0.7% luminaire lumens shall be emitted between 80 and 90 degrees above nadir. Minimum one-year warranty on fixture, three-year warranty on ballast. Pole shall be 25' tall with 10 to 12" diameter bolt circle at base. Tapered composite pole shaft with base cover, with woven fiberglass reinforcing. Smooth finish, painted dark bronze to match fixture. Pole shall have minimum 2.5" x 5" handhole with aluminum door and vandal-resistant screws. Transformer base shall be 17" tall x 13-14" square, breakaway design, with hinged door 9-10" x 11-12" high. Made of 356 T-6 aluminum alloy with stainless steel wheelabrated finish, with 10 to 12" diameter bolt circle at top and bottom. Bronze painted finish to match pole and fixture. Must meet all AASHTO requirements.	(1) MVR250/VBU/PA	295		**Fixture:** Gardco HPV23-1-5XVF-250PSMH-Voltage-BRP. **Pole:** Whatley RT34-25-DBZ-AB-SMS-DTC or PLP A525T-3-S1-HO **Transformer base:** United Lighting Standards TB2-17 or UTMT TB2-17	

Naomi Miller Lighting Design
46 23rd Street
Troy NY 12180
518.272.2745

Fixture Type	Description	Lamps	Watts	Volt.	Manufacturer's Catalog	Notes
P5	Downtown Campus walkway post-top fixture and pole. Center of globe is approximately 12'-6" above grade. Fluted aluminum pole with base with large handhole. Traditional “acorn” appearance fixture with cast aluminum housing, and heavy glass refractor. Toolfree access to lamp and ballast. HPF pulse-start magnetic ballast with ignitor, with quick-disconnect plugs. IP66 ingress protection on optical system to keep dirt and water vapor out. Minimum fixture efficiency of 69%. Less than 1% of lamp lumens emitted above 90° from nadir for “IESNA Cutoff” designation. IESNA Type III distribution. Hydroformed reflector and sealed glass prismatic globe. Exterior of globe is smooth to reduce dirt accumulation. 11’ fluted aluminum pole (low-copper aluminum to reduce corrosion) and decorative fluted base with large handhole. Textured black paint finish, or color as specified by owner.	(1) CMH70/U/830/MED/O	85		Lumec "Serenade DSX" S55C1-GL-70MH-DSX3-Volt-SFX-CRA-1-BK-TX (fixture) And Lumec R80-TBC1-BK-TX (pole)	

Naomi Miller Lighting Design
46 23rd Street
Troy NY 12180
518.272.2745

Fixture Type	Description	Lamps	Watts	Volt.	Manufacturer's Catalog	Notes
P6	Existing historical pedestal-mounted fixture at entrance to Draper Hall on Downtown Campus. Verdigris finish pole with top round white glass globe and four matching globe arms. Mounted to concrete pedestal with four round ball "feet". Fixture to be restored, using dedicated 18W compact fluorescent lamps and integral electronic compact fluorescent ballasts.	(5) CFTR18/830/4pin	Allow 100		To be restored by qualified historic light fixture manufacturer. Klemm Reflector, Baldinger Lighting, or Aurora Lamp Works or McNicholas Restoration.	
P7	Existing historical pedestal-mounted fixture at entrance to Draper Hall on Downtown Campus. Similar to F6, but with single top round white glass globe and no arms. Fixture to be restored, using dedicated 18W compact fluorescent lamps and integral compact fluorescent ballasts.	TBD. Probably (1) CFTR18/830/4pin	Allow 20		To be restored by qualified historic light fixture manufacturer. Klemm Reflector, Baldinger Lighting, or Aurora Lamp Works or McNicholas Restoration.	
P8	Two fixtures mounted on single 25' pole on 17" tall transformer base. Vertical lamp optical system, IES Type V distribution, flat lens and optics for Full Cutoff. Integral 250W pulse-start magnetic ballast and ignitor with quick-disconnect plugs. Minimum IP65 rating. Dieformed aluminum housing with TGIC Polyester powdercoat paint finish in bronze color. Extruded aluminum mitred doorframe with memory-retentive hollow section silicone rubber to seal door from insects and moisture. Stainless steel springs on doorway provide toolless entry. Minimum one-year warranty on luminaire, three-year warranty on ballast. Minimum optical efficiency of 72%, with maximum luminous intensity no less than 10 times nadir intensity. Less than 0.7% luminaire lumens shall be emitted between 80 and 90 degrees above nadir. Minimum one-year warranty on fixture, three-year warranty on ballast. Pole shall be 25' tall with 10 to 12" diameter bolt circle at base. Tapered composite pole shaft with base cover, with woven fiberglass reinforcing. Smooth finish, painted dark bronze to match fixture. Pole shall have minimum 2.5" x 5" handhole with aluminum door and vandal-resistant screws. Transformer base shall be 17" tall x 13-14" square, breakaway design, with hinged door 9-10" x 11-12" high. Made of 356 T-6 aluminum alloy with stainless steel wheelabrated finish, with 10 to 12" diameter bolt circle at top and bottom. Bronze painted finish to match pole and fixture. Must meet all AASHTO requirements.	(1) MVR250/VBU/PA	295		**Fixture:** Gardco HPV23-2@180-5XVF-250PSMH-Voltage-BRP. **Pole:** Whatley RT34-25-DBZ-AB-SMS-DTC or PLP A525T-3-S1-HO **Transformer base:** United Lighting Standards TB2-17 or UTMT TB2-17	

Naomi Miller Lighting Design
46 23rd Street
Troy NY 12180
518.272.2745

Fixture Type	Description	Lamps	Watts	Volt.	Manufacturer's Catalog	Notes
Q1	Existing "saucer light", to be removed and renovated at factory. Saucer is approximately 7'-8" in diameter, made of spun aluminum, with twelve 2" diameter glass apertures for downlight, and one central cavity for downlight accessible from removable grille. Manufacturer to renovate one saucer, removing existing wiring and internal fixtures. Replace with three circuits of lighting: four 2-lamp asymmetrical 2' long T5 fluorescent uplights, one 23W screwbase "Genura" R25 lamp in center downlight section accessible by star-pattern grille, and (12) 23W screw-base "Genura" R25 lamps held in ring above glass lens, aimed through existing glass apertures. Manufacturer shall remove all metal dents and ripples, repair damaged parts, and reconfigure internal lighting products. Manufacturer shall repaint saucer to match original paint finish. Saucer is currently suspended from four mounting points. Overall suspension length to be reduced 12" so that saucer hangs 12" higher above floor. Manufacturer shall investigate covering top of saucer so that it is easier to clean fixture when necessary, and so that the fixture does not collect debris. Lamps must still be easily maintained. See detail.	(8) F24T5HO/835 lamps (13) EL23/R25/WW "Genura" lamps by GE	Allow 547		Klemm Reflector "University at Albany Saucer Pendant". Contact Mike O'Hearn at 518.453.9445 (Total Lighting Concepts Albany) for information. Or approved equal by McNicholas Restoration or Baldinger.	
Q2	Exterior saucer. Uses fully concealed 7.5" diameter x 12" tall cylinder with wall bracket to provide IP65 rated sealed up and down light. (Gardco 301-EW-L-150CMH-Voltage-WP or equivalent) mounted inside refurbished saucer light. See detail.	(1) CMH150/U/830/MED/O	180		Klemm Reflector "University at Albany Saucer Pendant". Contact Mike O'Hearn at 518.453.9445 (Total Lighting Concepts Albany) for information. Or approved equal by McNicholas Restoration or Baldinger.	
Q2N	Same as Q2, but created new to match refurbished Q2. May also reuse saucers not used elsewhere on campus.	(1) CMH150/U/830/MED/O	180		Klemm Reflector "University at Albany Saucer Pendant". Contact Mike O'Hearn at 518.453.9445 (Total Lighting Concepts Albany) for information. Or approved equal by McNicholas Restoration or Baldinger.	
Q3	Large Saucer Light for Campus Ctr Lobby or other locations on Podium. Similar to Q1, but 9' in diameter, with single snowflake grille in center and (16) 2-1/2" diameter apertures around perimeter. This saucer is sufficiently large that it may not be possible to remove it from the building for refurbishment. Manufacturer to restore fixture in situ or in accessible location in building. Follow instructions for Q1, but use different lamping.	(8) F24T5HO/835/XPS (17) EL23/R25/WW "Genura" lamps by GE	639		Klemm Reflector "University at Albany Saucer Pendant". Contact Mike O'Hearn at 518.453.9445 (Total Lighting Concepts Albany) for information. Or approved equal by McNicholas Restoration or Baldinger.	

Fixture Type	Description	Lamps	Watts	Volt.	Manufacturer's Catalog	Notes
Q4	Same as Q1, except located where dimming is required. 21 to 35 W halogen lamps used in center aperture and ring of 12 small apertures.	(8) F24T5HO/835 lamps (13) 35Par16CURIO-PQ or Q21EMR16/C/FL25	Allow 703		Klemm Reflector "University at Albany Saucer Pendant". Contact Mike O'Hearn at 518.453.9445 (Total Lighting Concepts Albany) for information. Or approved equal by McNicholas Restoration or Baldinger.	
Q5	Existing 400W metal halide pendant in Gymnasium (verify wattage) with prismatic glass reflector. Rework fixture so that it uses a 400W pulse-start lamp. This requires replacing the ballast with a pulse-start magnetic ballast and ignitor, and replacing the wire between ballast and socket. Replace existing socket with a 4kV pulse-rated mogul-base socket. Ballast should be "potted" for reduced noise.	(1) MVR400/C/VBU/XHO /PA (42,000 initial lumens and CRI of 70)	452		Provide conversion kit for M135 or M155 ANSI code, such as M400/MULTI-PS-KIT by OsramSylvania	
Q6	2' x 4', 6-lamp T5HO fluorescent fixture suspended from ceiling approximately 4' overall (but no lower than 12" above the bottom of the beams) in Gymnasium. Run fixtures perpendicular to length of beams. Replace existing metal halide fixtures one-for-one. Fixture delivers upward and downward light, with housing and impact-resistant metal louver on bottom side. Wire guard. Minimum optical efficiency of 80%, with less than 15% of lumens emitted between 60 and 90 degrees from nadir. Integral programmed-start electronic ballasts. Alternate lamps switched on separate circuits for two-level switching. White painted finish. Aircraft cable suspension, with guy wires to stabilize fixture.	(6) F54T5HO/835 lamps	372		H.E. Williams GLA-4-654T5H-FWSBL6-UP4-Volt with wireguard	
Q7	Chandeliers for Dewey Library in Downtown Campus. Original historic chandeliers were removed during renovation in 1990s. They are stored in Uptown Campus Service Building A. These are to be taken down under the supervision of a lighting restoration manufacturer and shipped to the manufacturer's workshop. Chandelier to be repaired, rewired, refinished to match original brass or bronze finish, returned to Library and rehung with new mechanized lowering device. Chandeliers to be relamped with clear 15W 8000 hour incandescent medium base lamps. Lowering device to be engineered.	(24) 15W clear 8000 hour incandescent medium base lamps (such as GE 15S14/GR/CL/8)	360W	120	Lowering device manufacturer: Joslyn or equivalent, to be specified by Electrical Engineer Chandelier restoration: Klemm Reflector or Baldinger	

Naomi Miller Lighting Design
46 23rd Street
Troy NY 12180
518.272.2745

Fixture Type	Description	Lamps	Watts	Volt.	Manufacturer's Catalog	Notes
Q8	Decorative gothic pendant located in covered exterior walkway leading outward from Draper Hall. Fixture to be removed by a lighting restorataion specialist, repaired, rewired, and refinished to match original finish. Replace glass panels with frosted clear glass to obscure the view of the compact fluorescent lamp. Replace medium base socket. Fixture to be rehung under supervision of manufacturer.	(1) FLE20TBX/830 screwbase compact fluorescent	20	120	To be restored by qualified historic light fixture manufacturer. Klemm Reflector, Baldinger Lighting, or Aurora Lamp Works or McNicholas Restoration.	
S1	*New direct/indirect wall sconce to replace existing sconce. UL Wet Location listed. Heavy gauge aluminum square cylinder housing, 7" square x 20.25" tall, welded to a wall case that houses the wiring compartment. Wall case is 18-3/4" tall x 7" wide x 3-1/2" deep and hook-mounts to a wall support, fixed with bolts, with an EPDM gasket to seal the luminaire from dust and water infiltration. Max overall projection of 10-1/2". Two high-frequency electronic ballasts, approved manufacturers of Advance, Vossloh-Schwabe, and OsramSylvania, mounted to the heavy-gauge galvanized steel wall support. University to supply manufacturer with paint color chip to match original paint finish of box lights, for use on all exposed housing materials. All exterior hardware, including captive screws, shall be stainless steel. · Lamp sockets shall be mounted on sliding horizontal mounts, fastened down with wing nuts so that the upward lamp is aimed 15 degrees from vertical away from the mounting wall, and downward lamp 20 degrees vertical away from the mounting wall. Lamp sockets shall be centered 1.5" from the inside face of the cylinder, so that when aimed, none of the direct light of the lamp strikes the inside of the cylinder.*	*(2) CMH39/Par30/FL25 lamps.*	*90*		*SDL "SLF2520-UAD-MOD-Solite-39Par30CMH-B-Voltage-Grey Painted Finish"*	
S1 Cont'd	*Pulse-start ballasts wired with quick-disconnect plugs. · Lens frame is formed from low copper aluminum (356 alloy) to minimize corrosion, with silicone gasket to seal out contaminants. Lamp access through two captive screws in frame. Lenses in both top and bottom frame are "Solite" or equivalent microprism tempered glass, minimum 6" diameter or square, mounted so that top of lens is flush with the lens frame to allow water to run off. · Minimum one-year warranty on luminaire, 3 year warranty on ballast.· Manufacturer shall provide a working sample to lighting designer with submittal drawings.*					

Naomi Miller Lighting Design
46 23rd Street
Troy NY 12180
518.272.2745

Fixture Type	Description	Lamps	Watts	Volt.	Manufacturer's Catalog	Notes
S2	New downlight-only box light to replace existing on Service Buildings, Health Center, dormitories, and other buildings with shallow canopy overhangs. Heavy gauge aluminum square cylinder housing with solid top, 8-5/8" square x 20.25" tall, welded to a wall case that houses the wiring compartment. Wall case is 18-3/4" tall x 7" wide and hook-mounts to a wall support, fixed with bolts, with an EPDM gasket to seal the luminaire from dust and water infiltration. Overall projection shall not exceed 12-1/8". One high-frequency electronic ballast with quick-disconnect plugs, approved manufacturers of Advance, Vossloh-Schwabe, and OsramSylvania, is mounted to the heavy-gauge galvanized steel wall support. University to supply manufacturer with paint color chip to match original paint finish of box lights, for use on all exposed housing materials. The lamp socket shall be mounted on sliding horizontal mounts, fastened down with wing nuts so that the lamp is aimed 20 degrees from vertical away from the mounting wall. The lamp sockets shall be centered 2" from the inside face of the cylinder, so that when aimed, none of the direct light of the lamp strikes the inside of the cylinder. Lens frame is formed from low copper aluminum (356 alloy) to minimize corrosion, and silicone gasket to seal out contaminants. Lamp access through two captive screws in frame. The lens in the bottom frame is a regressed "Solite" or equivalent microprism tempered glass, minimum 6" diameter or square. Medium base pulse-rated socket. All exterior hardware, including captive screws, is made of stainless steel. UL listed for Wet Locations.	(1) CMH39/Par30/FL25 lamps.	45		SDL "SLF2520-Down-Solite-39Par30CMH-B-Voltage-Grey Painted Finish"	
S3	Campus Center Lobby wall sconces. Same as S1, but Wet-Location UL listing is not required, nor is uplight lens. Projection of fixture shall be no more than 10", by reducing the depth of the wall-bracket/ballast housing. Off-white semi-gloss paint finish to be specified by University.	(2) CMH39/Par30/FL25 lamps.	90		SDL "SLF2520-UAD-39Par30CMH-B-Voltage-MOD-Painted Finish-10" max projection"	
S4	Wall sconces with frosted acrylic shield, mounted in stairwell of dorm lobby. Acrylic shield approximately 9" wide x 16" tall. Fixture projects 4" maximum from wall. Integral electronic ballast and socket for 26W 4-pin compact fluorescent lamp. Retaining clip and other metal finishes to be brushed aluminum or satin chrome.	(1) CFTR26/835	28		Advent AIW1130-1F26-Volt-BAL or Winona 4616-1F26-Volt-OA-MOD-Brushed aluminum or Cooper Shaper 661-14"-CFL/126-Volt-NA	

Naomi Miller Lighting Design
46 23rd Street
Troy NY 12180
518.272.2745

Fixture Type	Description	Lamps	Watts	Volt.	Manufacturer's Catalog	Notes
S5	Existing cylinder-shaped box light currently installed in place of traditional box light. To be replaced in future to match S1.	Same as S1			Replace with Fixture type S1	
S9	Wall-mounted low-wattage wallpack for lighting doorways or small areas. Full cutoff optics. Cast aluminum housing and clear or prismatic glass aperture. Gray painted finish. Integral low-temperature electronic ballast for compact fluorescent lamp. Minimum fixture efficiency 65%. Minimum one-year warranty on fixture, three-year warranty on ballast.	(1) CFTR32/835	35		Gardco 106-FT-32CF-Voltage-Gray (12" diameter quarter-sphere sconce) Or McGraw Edison ZDW-32CF-Voltage-Gray or Hubbell LMC-32F-Volt-3	
S10	Wall-mounted low-wattage wallpack for lighting doorways or small areas. Full cutoff optics. Cast aluminum housing and clear or prismatic glass aperture. Gray painted finish. Integral electronic ballast for pulse-start metal halide lamp. Minimum fixture efficiency 65%. Minimum IP54 rating. Minimum one-year warranty on fixture, three-year warranty on ballast.	(1) CMH70/U/830/MED/O	80		Gardco 106-FT-70MH-Voltage-Gray (12" diameter quarter-sphere sconce) Or McGraw Edison ZDW-70PMH-Voltage-Gray or Hubbell LMC-70P-Volt-3	
S11	Wall-mounted low-wattage wallpack for lighting doorways or small areas. Full cutoff optics. Cast aluminum housing and clear or prismatic glass aperture. Gray painted finish. Integral electronic ballast for pulse-start metal halide lamp. Minimum fixture efficiency 65%.	(1) CMH150/U/830/MED/O	166		Gardco 106-FT-150MH-Voltage-Gray (12" diameter quarter-sphere sconce) Or McGraw Edison ZDW-150PMH-Voltage-Gray or Hubbell LMC-150P-Volt-3	
S12	Existing large rectangular decorative exterior lanterns at entrances to Hawley and Draper Halls. To be removed under supervision by a lighting restoration manufacturer, cleaned, repaired, finish restored, rewired. Lamp with decorative amber LED lamp replacement that fits a medium base, that flickers like a gas flame. Remount under supervision by the restoration manufacturer.	LED medium-base lamp replacement with amber color. 1 W maximum per socket.	5W max		To be restored by qualified historic light fixture manufacturer. Klemm Reflector, Baldinger Lighting, or Aurora Lamp Works or McNicholas Restoration.	
S13	Gothic lantern wall sconce on Downtown Campus to match Q8. To be restored in same manner and at same time as Q8.	(1) FLE20TBX/830 screwbase compact fluorescent	20		To be restored by qualified historic light fixture manufacturer. Klemm Reflector, Baldinger Lighting, or Aurora Lamp Works or McNicholas Restoration.	

Naomi Miller Lighting Design
46 23rd Street
Troy NY 12180
518.272.2745

Fixture Type	**Description**	**Lamps**	**Watts**	**Volt.**	**Manufacturer's Catalog**	**Notes**
S14	New wall-mounted exterior fixture for lighting doorways and similar lower-height, smaller area applications. May be used to replace existing 50W and lower-wattage HPS wallpacks. Fixture uses 32W compact fluorescent lamp. Integral low-temperature electronic ballast. Full cutoff asymmetrical optics, so it directs all light downward and away from wall. 12" diameter quarter-sphere sconce with bronze paint housing finish.	(1) CFTR32W/830 (triple-tube compact fluorescent)	35		Gardco 106-FT-32CF-Voltage-Bronze (12" diameter quarter-sphere sconce) Or McGraw Edison ZDW-32CF-Voltage-Bronze Or Hubbell "Laredo" LMC-32F-Volt-Bronze	

Naomi Miller Lighting Design
46 23rd Street
Troy NY 12180
518.272.2745

Fixture Type	Description	Lamps	Watts	Volt.	Manufacturer's Catalog	Notes
S15	New wall-mounted exterior fixture for lighting medium-size areas. May be used to replace 100W and lower wattage HPS wallpacks. 70W warm-color metal halide lamp and pulse-start magnetic ballast. Same as S14 in size, optics, and finish.	(1) CMH70/U/830/MED/O	95		Gardco 106-FT-70MH-Voltage-Bronze (12" diameter quarter-sphere sconce) Or McGraw Edison ZDW-70PMH-Voltage-Bronze OrHubbell "Laredo" LMC-70P-Volt-Bronze	
S16	New wall-mounted exterior for lighting large areas of Downtown campus. May be used to replace existing 150-250W HPS wallpacks. Fixture uses 150W metal halide lamp. Integral magnetic ballast. Same as S14 in size, optics, and finish.	(1) CMH150/U/830/MED/O	180		Gardco 106-FT-150MH-Voltage-Bronze (12" diameter quarter-sphere sconce) Or McGraw Edison ZDW-150PMH-Voltage-Bronze Or Hubbell "Laredo" LMC-150P-Volt-Bronze	
S17	Asymmetrical 150W T6 metal halide uplight with integral electronic ballast, mounted on top of existing bookcases or molding, to provide uplight onto Dewey Library ceiling. Bronze painted finish. Externally-mounted glare shield. Microprism lens. Asymmetrical light distribution from optical chamber, with minimum fixture efficiency of 58%, adjustable through yoke-mounting. Maximum fixture size 17-3/8" long x 10-3/8" projection, x 6-1/4" high; or 10.25" long x 11.75" projection x 6" high.	(1) CMH150/T6/830 with G12 base	180		Winona P1-SS-MH150-Voltage-SB4-PBP-EB-MP-External Glare shield or Insight TSF27-IBB-(1)-Volt-BR-VS-Electronic ballast or Elliptipar M402-150G-W-Painted bronze color-Voltage-Visor-0	
T1	20' long, 2ckt track, black finish, for mounting above slots in decorative ceiling coffer of Ballroom. See detail. Each 20' long track will accommodate three low-voltage track heads (MR16, with integral magnetic transformer) in 1st, 4th, and 7th slots, aimed downward. In square slots, the track will accommodate up to two halogen Par38 track heads, yoke-mounted with lockable aiming, for aiming focal lighting at the dais. Because the dais can move according to event needs, the track heads can be relocated to a different slot location. Track contains two neutrals for separate dimming of circuits. Both track fixture types shall accept deep cross blade louvers or honeycomb louvers for shielding glare. Provide eight Par38 track heads, twenty-four MR16 heads, and eight 20' tracks, total for Ballroom.	(24) Q50MR16/C/FL40 lamps (8) 100Par38/HIR/FL40 lamps	Allow 1500W for circuit 1; 1500W for circuit 2		Lightolier "Prospec" track and heads. System count: (24) MR16 track heads, Lightolier 26016MBBK (8) Par38 track heads, Lightolier 26238BK (8) 20' tracks, surface-mount 26013BK series with connectors, feeds, and gizmos necessary for a complete system. Or equivalent by Edison Price or Lighting Services Inc.	
W1	Recessed 8" wide x 4' long T8 fluorescent wallwasher with integral programmed start electronic ballast and kicker reflector. Minimum one-year warranty on fixture, three-year warranty on ballast.	(1) F32T8/835/XPS per 4' length	30		Columbia "Parawash" PW84-132-X-LDK-Voltage-Programmed Start	

Naomi Miller Lighting Design
46 23rd Street
Troy NY 12180
518.272.2745

Fixture Type	Description	Lamps	Watts	Volt.	Manufacturer's Catalog	Notes
W2	Similar to D2, except recessed compact fluorescent wall washer with angled glass lens. 6" diameter aperture with softglow reflector cone. Ceiling type to be confirmed by contractor. Fixture to not exceed 6" in depth. Minimum 55% fixture efficiency.	(1) CFTR32W/GX24q/830	35		Kurt Versen P950-SC or approved equivalent by Lightolier or Omega	
X1	Roof-mounted metal halide canopy lighting with remote ballast located within 20' of lamp. Maximum aperture size is 6.5". Low copper cast aluminum housing and visor. Silicone gasketed lens. Fixture mounted on hinged pole for easier maintenance. Fixture must be less than 7" wide to fit into slot of concrete canopy. 40 degree beam spread. Magnetic ballast in remote fiberglass ballast box with cast bronze top. See detail. Minimum one-year warranty on fixture, three-year warranty on ballast.	(1)CMH70/U/830/Med/O	85		Kim Lighting "Scarab" 6755R-NF-70PMH-Voltage-NB No known alternate	
Z1	Fountain uplights with base-mount bronze housing and stainless steel fasteners. Color changing LED technology with integral DMX controller. DMX Signal generator TBD. Minimum IP-68 rating. Nominal 16" long x 7.5" wide x 5.5" depth. Automatic temperature sensing if water level is low to protect LED life. Power and signal distributed to the fixture via flexible submersible cord that terminates into the wiring box. Specify length of cord in 5' increments. Minimum one-year warranty on fixture and LEDs, three-year warranty on power supply.	LED (included)	60	120	Hydrel 4426B-60LED-RGB-120V-MFL-FLC-BM-3DMX-DDX-CSL-required cord length No known alternate	
Z2	In-grade uplight, mounted in existing concrete holes at base of pool tower. Bronze housing 9" diameter x 16" deep, IP67 rating, double lens to reduce heat of outer lens for safety, convex lens, narrow light distribution less than 15 degrees to 50% candlepower. Integral electronic ballast. Verify fixture will fit existing location before ordering fixture.	(1) CMH35/Par30/SP	40		Hydrel M9420-B-P3035CM-Volt-NSP-CLC-IHL-GEB-BZ or approved equivalent	

General Notes

* All fixtures to be UL listed.
* Electrical contractor shall verify all voltages prior to ordering fixtures
* Electrical contractor shall verify ceiling types prior to ordering fixtures
* All T8 lamps to have a CRI greater than 80, average rated life shall be 24,000 hours or greater.
* Electronic ballasts to have less than 10% THD, >0.88BF, and minimum three year warranty

Naomi Miller Lighting Design
46 23rd Street
Troy NY 12180
518.272.2745

Fixture Type	Description	Lamps	Watts	Volt.	Manufacturer's Catalog	Notes
* All metal halide lamps to be Philips MasterColor Ceramic Metal Halide lamps or equiv by OSI or GE, unless otherwise noted.						

Naomi Miller Lighting Design
46 23rd Street
Troy NY 12180
518.272.2745

LLF™
Light Reinvented.™

CATALOG NUMBER:	
TYPE:	NOTES:

NAOMI MILLER
LIGHTING DESIGN
Fixture Type: D1

LR6 6” Downlight Module

Product Description

The LR6 is a downlight module for new construction and retrofit that installs easily in most standard six inch recessed IC or non-IC housings. The LR6 generates white light with LED’s in a new way that enables an unprecedented combination of light output, energy efficiency, beautiful color, and affordability. U.S. Patent # 7,213,940 issued. Numerous patents pending.

Performance Sumary

- Nominal delivered light output = 650 lumens
- Nominal input power = 12 Watts
- CRI = 92

Ordering Information

LR6 – 120V, Incandescent Color (2700K), Edison Base (STANDARD)
LR6-GU24 – 120V, Incandescent Color (2700K), GU24 Base
LR6C – 120V, Neutral Color (3500K), Edison Base
LR6C-GU24 – 120V, Neutral Color (3500K), GU24 Base


LR6-GU24


LR6


LR6C

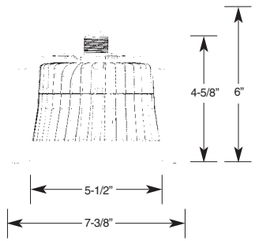

Accessories Compatible with all LR6 Models

LE6 - Adjustable eyeball trim
LT6A - Anodized trim
LT6AW - Wheat anodized trim
LT6AP - Pewter anodized trim
LT6AB - Black anodized trim
LT6WH - Smooth white trim

LE6

LT6

NAOMI MILLER
LIGHTING DESIGN
Fixture Type: D1

Downlight Module

Specifications and Features

Light Emitting Diodes

- Proprietary technology delivers high quality white light
- Designed for 50,000 hours lifetime - when light output drops below 70% of initial output

Construction

- Durable die-cast aluminum upper housing, lower housing, and upper cover
- Integrated thermal management system conducts heat away from LED and transfers it to the surrounding environment. LED junction temperatures stay below specified maximums when installed in attic insulation with temperatures exceeding 60 degrees Celsius.

Optical System

- Proprietary optical system utilizes a unique combination of reflective and refractive optical components to achieve a uniform, comfortable appearance. Pixelation and direct view of uncomfortable LED’s is eliminated.
- White Lower Reflector balances brightness of refractor with the ceiling to create comfortable high-angle appearance. Works with refractor to deliver an optimized distribution that illuminates walls and vertical surfaces increasing the sense of spaciousness.

Electrical System

- Integral, high efficiency driver and power supply. Power factor > 0.90 Input voltage = 120V,60Hz
- Controllable with some incandescent forward phase dimmers (reference www.llfinc.com for recommended dimmers)

Regulatory

- Tested and certified to UL standards.
- Utilize GU-24 base for new construction projects in California or other areas where high efficacy line voltage sockets are required
- Exceeds California Title-24 high efficacy luminaire requirements

Photometry

LR6 – 120V, Incandescent Color (2700K), Edison Base (STANDARD)
Lighting Sciences Inc. Certified Test #22226

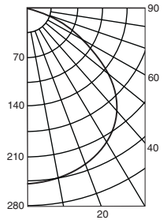

Intensity (Candlepower) Summary

ANGLE	MEAN CP
0˚	249
5˚	248
15˚	242
25˚	228
35˚	203
45˚	165
55˚	115
65˚	62
75˚	24
85˚	6
90˚	0

Zonal Lumen Summary

ZONE	LUMENS	%LAMP	%FIX
0˚- 30˚	196	30.39	30.39
0˚- 40˚	323	49.94	49.94
0˚- 60˚	553	85.35	85.35
0˚- 90˚	647	100.00	100.00

Installation

- Designed to easily install in standard 6”downlight housings from the majority of manufacturers
- Quick install system utilizes a unique retention feature. Attach socket to module. Adjust module to ready position and slide into housing. Rotate module 1⁄4 turn to the right to lock in place.
- Reference www.LLFinc.com for housing compatibility

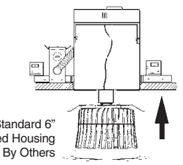

Application Comparison

Kitchen

	6’ x 6’ Spacing		5’ x 5’ Spacing		4’ x 4’ Spacing	
	Workplane Illuminance	Wall Illuminance	Workplane Illuminance	Wall Illuminance	Workplane Illuminance	Wall Illuminance
LR6	**15.1**	**8.0**	**19.9**	**10.7**	**27.2**	**15.4**
65W BR30 White Baffle	14.0	6.3	18.7	8.6	26.1	12.6
18W CFL White Baffle	15.5	7.9	20.8	10.6	28.7	15.4
50W PAR30 White Baffle	16.7	4.1	22.9	5.7	34.1	8.6

Notes:
- Average initial illuminance in footcandles, reflectances = 80/50/30, workplane height = 2.5'
- Nine lights per room. Room sizes = 18'x18'; 15'x15', 12'x12'

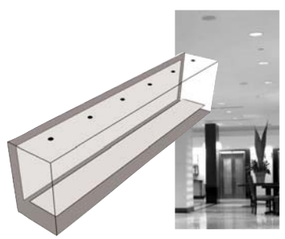

Hallway

	6’ Spacing		8’ Spacing		10’ Spacing	
	Workplane Illuminance	Wall Illuminance	Workplane Illuminance	Wall Illuminance	Workplane Illuminance	Wall Illuminance
LR6	**12.6**	**6.8**	**9.6**	**5.2**	**7.6**	**4.0**
65W BR30 White Baffle	12.0	5.3	9.1	4.0	7.2	3.2
18W CFL White Baffle	13.0	6.6	10.1	5.1	7.9	4.0
50W PAR30 White Baffle	14.6	3.1	11.2	2.6	9.1	1.8

Notes:
- Average initial illuminance in footcandles, reflectances = 80/50/30, workplane height = 2.5'
- Six lights per hall, width = 6'

LLF™
Light Reinvented.™

LED Lighting Fixtures, Inc.
Keystone Technology Park VI • 617 Davis Drive • Suite 200 • Morrisville • NC • 27560
919 287-0470 • fax 919 991-0730
www.LLFinc.com

NAOMI MILLER
LIGHTING DESIGN

Fixture Type: D3

Light Reinvented.™

CATALOG NUMBER:

TYPE: NOTES

LR6 6” Downlight Module

Product Description

The LR6 is a downlight module for new construction and retrofit that installs easily in most standard six inch recessed IC or non-IC housings. The LR6 generates white light with LED’s in a new way that enables an unprecedented combination of light output, energy efficiency, beautiful color, and affordability. U.S. Patent # 7,213,940 issued. Numerous patents pending.

Performance Sumary

- Nominal delivered light output = 650 lumens
- Nominal input power = 12 Watts
- CRI = 92

Ordering Information

LR6 – 120V, Incandescent Color (2700K), Edison Base (STANDARD)
LR6-GU24 – 120V, Incandescent Color (2700K), GU24 Base
LR6C – 120V, Neutral Color (3500K), Edison Base
LR6C-GU24 – 120V, Neutral Color (3500K), GU24 Base

LR6-GU24

LR6

LR6C

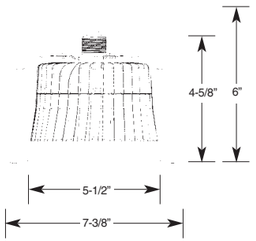

Accessories Compatible with all LR6 Models

LE6 - Adjustable eyeball trim
LT6A - Anodized trim
LT6AW - Wheat anodized trim
LT6AP - Pewter anodized trim
LT6AB - Black anodized trim
LT6WH - Smooth white trim

LE6

LT6

NAOMI MILLER
LIGHTING DESIGN

Fixture Type: D3

Light Emitting Diodes

- Proprietary technology delivers high quality white light
- Designed for 50,000 hours lifetime - when light output drops below 70% of initial output

Construction

- Durable die-cast aluminum upper housing, lower housing, and upper cover
- Integrated thermal management system conducts heat away from LED and transfers it to the surrounding environment. LED junction temperatures stay below specified maximums when installed in attic insulation with temperatures exceeding 60 degrees Celsius.

Optical System

- Proprietary optical system utilizes a unique combination of reflective and refractive optical components to achieve a uniform, comfortable appearance. Pixelation and direct view of uncomfortable LED’s is eliminated.
- White Lower Reflector balances brightness of refractor with the ceiling to create comfortable high-angle appearance. Works with refractor to deliver an optimized distribution that illuminates walls and vertical surfaces increasing the sense of spaciousness.

Electrical System

- Integral, high efficiency driver and power supply. Power factor > 0.90 Input voltage = 120V,60Hz
- Controllable with some incandescent forward phase dimmers (reference www.llfinc.com for recommended dimmers)

Regulatory

- Tested and certified to UL standards.
- Utilize GU-24 base for new construction projects in California or other areas where high efficacy line voltage sockets are required
- Exceeds California Title-24 high efficacy luminaire requirements

Photometry

LR6 – 120V, Incandescent Color (2700K), Edison Base (STANDARD)

Lighting Sciences Inc. Certified Test #22226

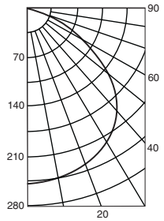

Intensity (Candlepower) Summary

ANGLE	MEAN CP
0˚	249
5˚	248
15˚	242
25˚	228
35˚	203
45˚	165
55˚	115
65˚	62
75˚	24
85˚	6
90˚	0

Zonal Lumen Summary

ZONE	LUMENS	%LAMP	%FIX
0˚- 30˚	196	30.39	30.39
0˚- 40˚	323	49.94	49.94
0˚- 60˚	553	85.35	85.35
0˚- 90˚	647	100.00	100.00

Installation

- Designed to easily install in standard 6”downlight housings from the majority of manufacturers
- Quick install system utilizes a unique retention feature. Attach socket to module. Adjust module to ready position and slide into housing. Rotate module 1⁄4 turn to the right to lock in place.
- Reference www.LLFinc.com for housing compatibility

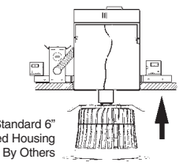

Application Comparison

Kitchen

	6’ x 6’ Spacing		5’ x 5’ Spacing		4’ x 4’ Spacing	
	Workplane Illuminance	Wall Illuminance	Workplane Illuminance	Wall Illuminance	Workplane Illuminance	Wall Illuminance
LR6	**15.1**	**8.0**	**19.9**	**10.7**	**27.2**	**15.4**
65W BR30 White Baffle	14.0	6.3	18.7	8.6	26.1	12.6
18W CFL White Baffle	15.5	7.9	20.8	10.6	28.7	15.4
50W PAR30 White Baffle	16.7	4.1	22.9	5.7	34.1	8.6

Notes:
- Average initial illuminance in footcandles, reflectances = 80/50/30, workplane height = 2.5'
- Nine lights per room. Room sizes = 18'x18'; 15'x15', 12'x12'

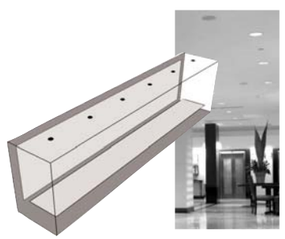

Hallway

	6’ Spacing		8’ Spacing		10’ Spacing	
	Workplane Illuminance	Wall Illuminance	Workplane Illuminance	Wall Illuminance	Workplane Illuminance	Wall Illuminance
LR6	**12.6**	**6.8**	**9.6**	**5.2**	**7.6**	**4.0**
65W BR30 White Baffle	12.0	5.3	9.1	4.0	7.2	3.2
18W CFL White Baffle	13.0	6.6	10.1	5.1	7.9	4.0
50W PAR30 White Baffle	14.6	3.1	11.2	2.6	9.1	1.8

Notes:
- Average initial illuminance in footcandles, reflectances = 80/50/30, workplane height = 2.5'
- Six lights per hall, width = 6'

Light Reinvented.™

LED Lighting Fixtures, Inc.
Keystone Technology Park VI • 617 Davis Drive • Suite 200 • Morrisville • NC • 27560
919 287-0470 • fax 919 991-0730
www.LLFinc.com

STRL

Stratus Center Louver Re

NAOMI MILLER
LIGHTING DESIGN

Fixture Type: F1, F2

Features

- True parabolic center louver provides pre
- High efficiency; delivers more light to the
- One, two or three lamp cross sections
- Available for T8, T5, T5HO, or 40TT lamps
- Thermoplastic basket support brackets
- Light basket and reflector are powder coated after fabrication
- Louver available in a variety of finishes
- Easy to install and maintain
- UL listed 1598
- Damp label available on most models
- NEC/CEC-compliant ballast disconnect standard for appropriate models – see page 111

Ordering Information

Example: STRL24-232G-EU

STRL ____ - ____ ____ ____ - ____ MPO - ____ - ____ ____ - ____

Model

STRL - Stratus Center Louver

Size

14 - 1'x4'
22 - 2'x2'
24 - 2'x4'

Number of Lamps in Cross Section

1 - One
2 - Two
3 - Three
See Product Availability Table Below.

Lamp Type

14 - 2', 14 Watt, T5
17 - 2', 17 Watt, T8
24 - 2', 24 Watt, T5HO
28 - 4', 28 Watt, T5
32 - 4', 32 Watt, T8
40TT - 40 Watt Twin Tube Compact, 2G11 Base
54 - 4', 54 Watt, T5HO

Ceiling Type

G - Grid (For hard ceilings use flange kit)
SG - Slot Grid
SM - Surface Mount

Louver Type

High Efficiency (2x2 and 2x4 only)
HLS - Low Iridescent Specular
HMA - Matte Anodized Low Iridescent Semi-Specular
Brightness Control
BLS - Low Iridescent Specular Parabolic
BMA - Matte Anodized Low Iridescent Semi-Specular Parabolic
BM4R - MIRO®-4, 95% Reflectance Aluminum
BGW - Gloss White Enamel
Steel Cross Baffle
WCB - White Cross Baffle
WPB - White Perforated Cross Baffle

Shielding

MPO - Metal Perf With Overlay

Air Function

Blank - Static
A - Air Handling

Ballast

NOTE Ballast nomenclature has changed. See page 111 for details.

E - Electronic T8, Instant Start
3E - 3-Lamp Electronic T8, Instant Start
ED - Dimming Electronic T8
EP - Electronic T5, T5HO or T8, Programmed Start
ETT - Electronic Twin Tube, Instant Start, (Specify voltage)

Voltage

120 - 120V
277 - 277V
347 - 347V
U - 120V-277V

Options

FK14 - 1x4 Flange Kit
FK22 - 2x2 Flange Kit
FK24 - 2x4 Flange Kit
GLR - Fast Blow Fuse
GMF - Slow Blow Fuse
EL - Emergency Battery Pack
CSA - UL listed or CSA certified for Canada
DL - Damp Label

Product Availability

Size	Lamps in Cross Section	Lamps in Fixture	Lamp Type	Height
1'x4'	1	1	28, 32, 54	5¾"
	1	2	40TT	5¾"
	2	2	28, 32, 54	5¾"
2'x2'	2	2	14, 17, 24, 40TT	5¾"
	3	3	14,17, 24	5¾"
2'x4'	2	2	28, 32, 54	5¾"
	2	4	40TT	5¾"
	3	3	28, 32, 54	5¾"

Note: 3-lamp, T8 units not available for end-to-end row mounting.

Cross Sections

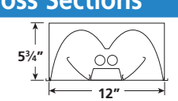

STRL14-232

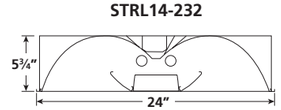

STRL22-217, STRL24-232

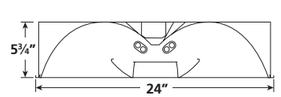

STRL22-240TT, STRL24-240TT

High Efficiency Louver

Brightness Control Louver

Steel Cross Baffle

Columbia LIGHTING

NEO-RAY™

Catalog #	
Project	
Comments	
Prepared by	

NAOMI MILLER
LIGHTING DESIGN

Fixture Type: J1

DESCRIPTION

Series 66DIW is part of a family of totally harmonic task and ambient lighting elements. Distinguished by their compact, low profile design and their highly efficient reflector and baffle system, they are ideal for low ceiling office lighting. T8 lamps are enclosed in a compact extruded aluminum profile. High level, glare free, wide spread illumination is projected up, down, or up and down. Wall, surface, and pendant mounted applications are provided as singular elements or in continuous runs, finished to blend or accentuate.

SPECIFICATION FEATURES

A ... Construction
Extruded aluminum housing. Nominal 4' or 8' illuminated sections.

B ... Shielding
Pearlescent parabolic baffle. Clear acrylic, prismatic lens.

C ... Electrical
120, 277, 347 or Universal Voltage electronic ballast. Luminaires and electrical components certified to UL and CUL standards.

D ... Finish
Durable, low gloss, white, powder coated acrylic finish.

Mounting
Fixture mounts directly to existing structure over a 2" x 4" standard electrical box mounted horizontally in the wall.

Omni
66-DIW

1 & 2T8

Wall
Direct-Indirect

Light Distribution
Indirect - 52.2%
Direct - 47.8%

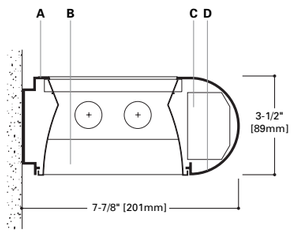

ORDERING INFORMATION

Sample Number: 66DIW-1T8-4-2EB-SI-S58

Series
66= Omni

Light Output
DI= Direct/Indirect

Mounting
W= Wall

Number of Lamps
1= 1 Lamp
2= 2 Lamps

Lamp Type
T8= T8

Run Length
Overall Nominal Run Length __ ft.

Voltage [1]
1= 120V
2= 277V
3= 347V

Ballast
EB= Electronic Ballast
DB= Dimming Ballast

Switching Options
SI= Single Switching
DU= Double Switching

Emergency
EM= Emergency Pack

Fusing
GLR= GLR
GMF= GMF

Shielding Options
S58= KSH-12 Acrylic Lens
S79= Parabolic Baffle

Notes: 1 Not all options available. Please consult your Cooper Lighting Representative for availability.

NAOMI MILLER
LIGHTING DESIGN

Fixture Type: J1

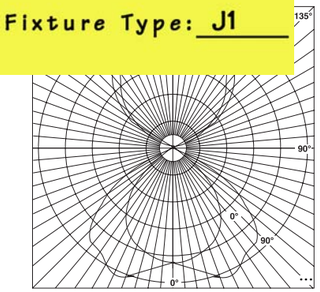

DIW-2T12
(2) F40T12RS/WW
3200 Lumens

Efficiency 75.5%

Test Report
#5667.0

Coefficients of Utilization

Effective floor cavity reflectance 20%

rc	80%				50%			30%		
rw	70	50	30	10	50	30	10	50	30	10
RCR										
1	74	72	69	67	56	54	53	46	45	44
2	69	64	60	56	50	48	46	42	40	39
3	63	57	52	48	45	42	39	38	36	34
4	58	51	45	41	41	37	34	34	32	20
5	54	45	40	36	36	33	30	31	28	26
	49	41	35	31	33	29	26	28	25	23
7	45	37	31	27	30	26	23	25	22	20
8	42	33	27	24	27	23	20	23	20	17
9	39	30	24	21	24	20	17	20	17	15
10	36	27	22	18	22	18	15	18	15	13

Zonal Lumen Summary

Zone	Lumens	%Lamp	%Fixture
0-30	779	12.2	16.1
0-40	1317	20.6	27.3
0-60	2218	34.7	45.9
0-90	2310	36.1	47.8
90-180	2522	39.4	52.2
0-180	4832	75.5	100.0

Total Luminaire Efficiency = 75.5%

Candela

Angle	Along ∥	45°	Across ⊥
0	897	897	897
5	893	902	914
15	796	890	980
25	770	987	1080
35	644	884	1001
45	429	673	862
55	213	444	604
65	25	73	149
75	5	8	9
85	1	2	2
90	0	0	0
95	9	4	4
105	105	77	30
115	281	251	223
125	440	476	428
135	543	629	668
145	755	830	842
155	871	942	963
165	880	918	941
175	972	981	986
180	976	976	976

MOUNTING INFORMATION

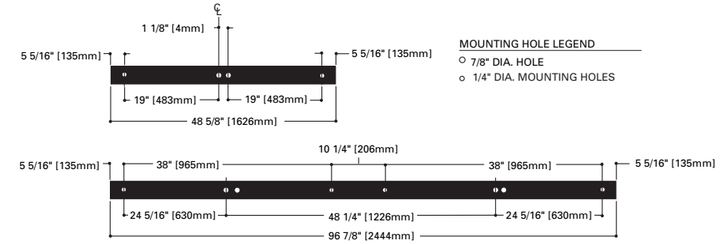

SHIELDING INFORMATION

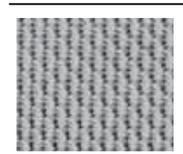

S58 Acrylic Lens
1/8" thick, clear acrylic prismatic lens.

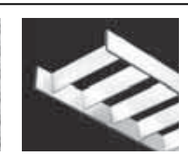

S79 Parabolic Louver
1-1/4" high blades. 2.4" o.c., semi-specular, low brightness, Pearlescent Aluminum baffle. Continuous and unbroken, no visible joints.

LITECONTROL

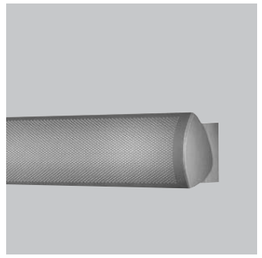

Ty
Pr

NAOMI MILLER
LIGHTING DESIGN

Fixture Type: J4, J8

V3™

W-A-3400

Adjustable Distribution Wall Valance

Specifications

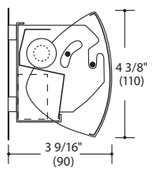

Indirect/Direct (W-AID)

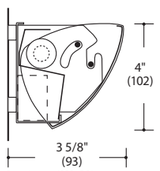

Indirect (W-AI)

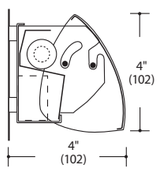

Semi-Direct (W-ASD)

HOUSING. Die-formed steel. T-slots and knockouts provide for fixture mounting and wiring. End headers incorporate attachment system for 3-position adjustment of fascia and row mounting.
END CAPS. Steel, 14-gauge, with no holes or knockouts, finished to match fascia.
FASCIA. Perforated (**PFF**): Fascia is die-formed 22-gauge steel with .046" diameter holes 0.140" OC, 10% open. White acrylic diffusing panel retained behind. Non-patterned (**NPFF**): Fascia is die-formed 22-gauge steel. Fascia is attached to housing in one of three locked positions: asymmetric indirect (**AI**), asymmetric indirect/direct (**AID**), and asymmetric semi-direct (**ASD**). On six- and eight-foot fixtures, the fascias are mounted as two three- or four-foot segments with the same joining detail at the center as two separate three- or four-foot fixtures. For longer rows, therefore, a consistent pattern of three- or four-foot perf panels can be achieved even when combining six- and three- or eight- and four-foot fixtures.
REFLECTOR. Reflector is die-formed steel with high-reflectance white finish. Luminance Control Deflector™ (**LCD**) behind and above lamp is die-formed high-reflectance aluminum.
LAMPING. Available in one-lamp T8, T5 or T5HO.
BALLAST. Low-profile Ballast (**LP/ELB**), electronic, high power factor, thermally protected Class P, Sound Rated A, less than 10% THD, manufactured by a UL Listed manufacturer, as available, determined by Litecontrol. Ballasts with a voltage range of 120 to 277 will be used when fixture configuration and ballast availability allow. The minimum number of ballasts will be used.
PRE-WIRING. Fixtures are supplied with #12 AWG type THHN wire for branch circuits. One end will have factory installed push-in quick-connects. The other end will be stripped back 1/2" for quick connection in field. For fixtures to accommodate special circuits such as night light and emergency, etc., in-field wiring will be required. See Pre-wiring Information for further details.
MOUNTING. Housing is mounted directly to the wall with mounting screws. Four push-in rubber standoffs are installed on each 3-foot or 4-foot fixture housing section. Additional rubber standoffs are provided for each additional mounting screw position. Fixtures can be mounted in continuous rows. Spring steel splines are provided at row-joint locations.
CERTIFICATION. Fixtures and electrical components shall be UL and/or CUL Listed and shall bear the I.B.E.W., A.F. of L. label.

Note: Litecontrol reserves the right to change specifications without notice for product development and improvement.

Ordering guide

Product, lamping, & length

W -	AID -	34	1	4	T5HO -
Mounting	Distribution	Series	Lamp Count	Nominal Length(ft)	Lamp Type
W Wall-Mounted	**AID** Indirect/ Direct **AI** Indirect **ASD** Semi-Direct	**34**	1 → 1 → 2 → 2 → see **notes**	3 4 6 8	**T8** **T5HO** **T5**

Options

PFF -	CWM -	LP/ELB -	1 CWQ -	LP/EF -	120
Fascia Type	Finish	Ballast	Pre-Wiring	Other Options	Volts
PFF **NPFF**	**CWM** (Matte White) is standard see *LiteColors*™ in Product Guide for other finishes	**LP/ELB** is standard **LPD/ELB** see **Ballast options**	**1CWQ**	**LP/EF** **F** see **Other options**	**120** **277**

notes:
Lamp Count = total number of lamps in the fixture
For Ordering guide information in shaded areas, choose selection by reading ACROSS the shaded areas for correct specifications.

Cross-section lamping

1-T5 or T5HO W-AID	1-T5 or T5HO W-ASD	1-T5 or T5HO W-AI	1-T8 W-AID	1-T8 W-ASD	1-T8 W-AI

W-AID-3414T5HO-PFF-CWM-LP/ELB-1CWQ-LP/EF-120 is a typical catalog number for a 1-lamp (1 lamp in cross-section) , 4-foot long, high-output T5 fixture with perforated fascia locked at the indirect/direct position, Matte White finish, low-profile electronic ballast, pre-wired with single-circuit branch wiring and quick-connects, low-profile emergency fluorescent ballast, 120 volts.

Questions to Ask
1. 120 or 277 volt? **2.** Row information, including desired fixture lengths?
3. White, *LiteColor*, or special color? **4.** Other options?
5. PFF or NPFF fascia selection? **6.** Fascia position selected?

litecontrol.com

NAOMI MILLER
LIGHTING DESIGN

Fixture Type: J4, J8

Ballast options

Specify in place of **LP/ELB**:
LPD/ELB Low-profile Dimming Ballast. Manufactured by a UL Listed manufacturer. Contact factory for availability.

Other options

F Fuse. Slow or fast blow available, determined by Litecontrol.
LP/EF Low-profile Emergency Fluorescent Ballast. Battery-powered ballast from a UL Listed manufacturer will operate one T8, T5, or T5HO lamp for 1 1/2 hours (not available for 3' fixtures). Consult factory for availability.

Planning for installation

Cross-section

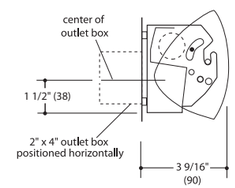

Note: Fascia is shipped separately from housing to allow for easy mounting of housing before fascia attachment. Fascia position is specified by catalog number, but may be set to any of the three positions in the field.

Emergency Ballast option in 4' fixtures will reduce the number of available mounting slot locations.

Fixture Lengths:
36 3/16", 48 3/16", 72 3/8", 96 3/8"
T-slot for #10 mounting screws
7/8" hole for electrical feed
2" knockout for access to outlet box and electrical feed.

Individual fixture

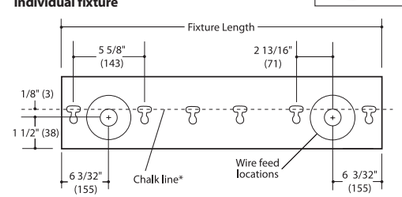

* **Set chalk line for mounting screws 1/8" above center of outlet box**

Row mounting

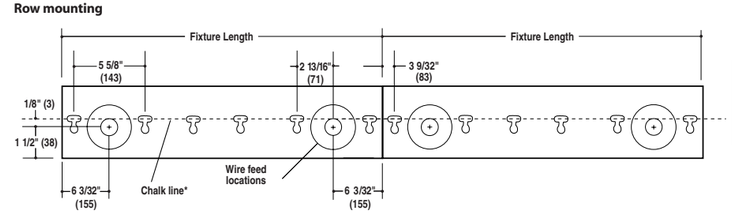

Photometric data

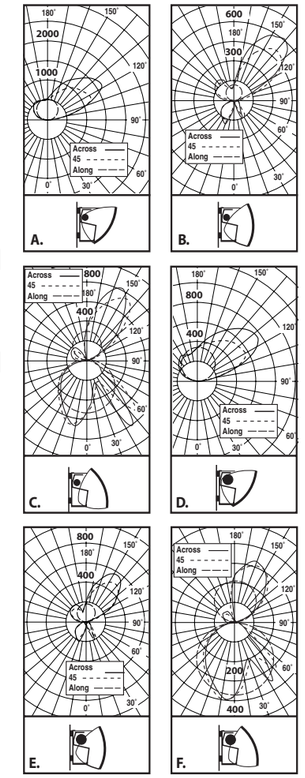

A. W-AI-3414T5HO-PFF-LP/ELB 67.7% Efficiency
Litecontrol Certified Test Report #28016000

B. W-AID-3414T5HO-PFF-LP/ELB 59.9% Efficiency
Litecontrol Certified Test Report #28116000

C. W-ASD-3414T5HO-PFF-LP/ELB 57.7% Efficiency
Litecontrol Certified Test Report #28216000

D. W-AI-3414T8-PFF-LP/ELB 59.8% Efficiency
Litecontrol Certified Test Report #28011000

E. W-AID-3414T8-PFF-LP/ELB 54.9% Efficiency
Litecontrol Certified Test Report #28111000

F. W-ASD-3414T8-PFF-LP/ELB 57.6% Efficiency
Litecontrol Certified Test Report #28211000

For complete photometric information, see website.

Click on
Quick Find **34**
litecontrol.com

FINELITE

Series 16

NAOMI MILLER
LIGHTING DESIGN

Fixture Type:_____
L1,L2,L3,L4,L5,L6,L7

Series 16 is a low profile rectilinear form scaled to blend inconspicuously into any interior architecture. At just 7.6″ by 1.9″ this luminaire integrates exceptionally well into low ceiling environments.

Choose from two downlight shielding options and three uplight controls. The luminaire is available in 4′ and 8′ lengths and comes standard in 1, 2, or 3 T8, T5, or T5HO cross-sections.

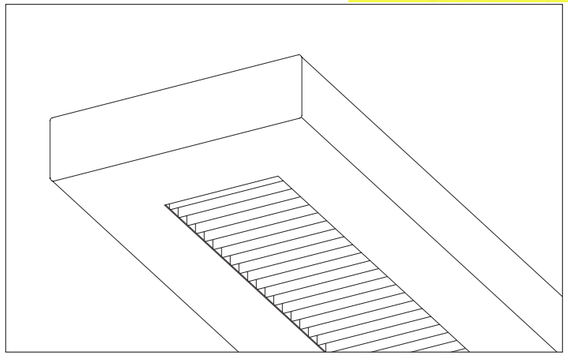

Series 16 with White Cross Blade (WCB) baffle and standard flat endcap. Also available with Semi-Specular Louvers (SSL) (not shown).

DIMENSIONS

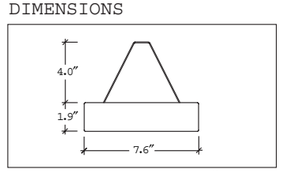

Small-scale unit measures 7.6″ wide by 1.9″ high.

T8, T5 OR T5HO LAMPS

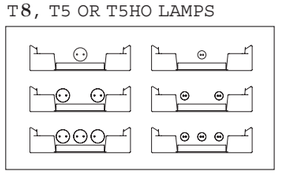

1, 2, or 3 T8 or T5 or T5HO lamps.

ENDCAP OPTION

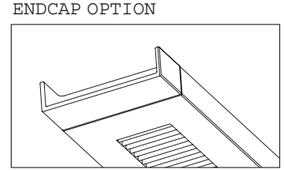

Series 16 comes with an optional extended diecast aluminum endcap with 0.100″ reveal.

WSO

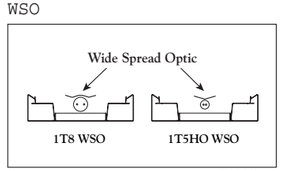

Special wide spread reflector on 1T5HO or 1T8 cross-sections gives extended distribution and is especially effective in lower ceiling areas.

STANDARD FIXTURE SUPPORT

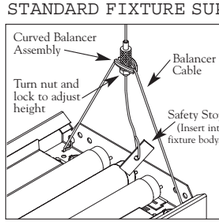

Curved Balancer Assembly with standard Fully Adjustable hanging hardware with safety stop.

The Curved Balancer improves the strength of the hardware connection and improves installation. The balancer arrives attached to the fully adjustable hanging hardware. Simply adjust the bottom nut to the desired height, secure it to the balancer cable, adjust the side-to-side level, and secure the top nut. Install safety stop into fixture body.

STD PLUG & PLAY WIRING

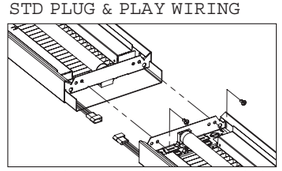

Standard plug-together wiring and die-formed aligner plates come factory installed for smooth joints with no light leaks.

OPTIONAL SEMI-ADJUSTABLE CABLE SUPPORT

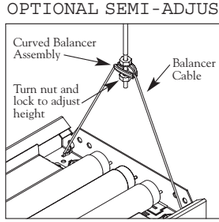

Curved Balancer Assembly with optional semi-adjustable hanging hardware.

Optional Semi-Adjustable aircraft cable, (AC) ± 0.5″ in lengths of 12″, 15″, 18″, 21″, 24″, 27″, 30″, 36″. Aircraft cable assembly screws into the balancer. Attach Curved Balancer in the same way as Fully Adjustable assembly.

Finelite, Inc. · 30500 Whipple Road · Union City, CA 94587-1530 · 510/441-1100 · FAX: 510/441-1510 · www.finelite.com

NAOMI MILLER
LIGHTING DESIGN

Fixture Type:_____
L1,L2,L3,L4,L5,L6,L7

Series 16 Technical Sheet

lengths shown below.

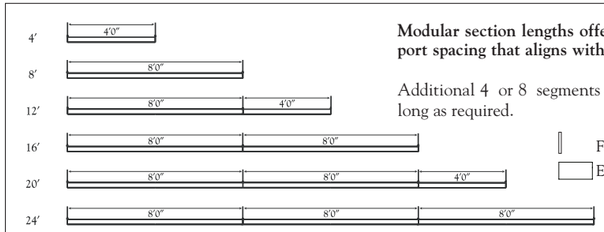

Modular section lengths offer standard 4′0″ and 8′0″ support spacing that aligns with grid ceiling systems.

Additional 4′ or 8′ segments can be added to create runs as long as required.

Flat Endcap adds 0.1″ each end

Extended Endcap adds 2.5″ each end

CONTROLLED CENTER OPTICS

Controlled Center Optics (CCO) covers the center lamp, making it 100% direct. Turn side lamps off for tightly controlled downlight, or turn the side lamps on and the center off for indirect/direct. Use as part of the Finelite ICLS system to maximize effectiveness of classrooms and training facilities.

SOFT TOP OPTICS

Soft Top Optics (STO) diffuses and softens the uplight with a perforated covering above the lamps. STO is helpful in applications where less light is desired on the ceiling and more direct downlight is needed.

TOTALLY DIRECT OPTICS

With Totally Direct Optics (TDO), a covering over the lamps makes all the light reflect downward for a 100% direct fixture.

SPECIFICATIONS

CONSTRUCTION: 20 Gauge die-formed steel body with 18 gauge die-formed internal joiner system, plug-together wiring standard. All components are hard tooled to tolerances of 0.005″.

ENDCAPS: (FE) Flat endcap standard, 14 gauge die-formed steel, adds 0.1″ at each end. *Optional: (EE) Extended Endcap, aluminum die-cast endcap with 0.100″ reveal, adds 2.5″ nominal at each end. No exposed fasteners, holes or knockouts.*

REFLECTORS: (91W) Die-formed pre-painted aluminum, 91% reflective white. *Optional: (EP) Extended Performance reflector system (1T5HO Only). (WSO) Wide Spread Optic for 1T8 or 1T5HO.*

UPLIGHT OPTICAL OPTIONS:

- **Open** No optical control.
- **CCO** *Controlled Center Optics, covers center lamp, 100% downlight (center only); 96% reflective white paint.*
- **STO** *Soft Top Optics, 0.063″ perforations cover the top surface; 96% reflective white paint.*
- **TDO** *Totally Direct Optic, solid top above lamps, 0/100; 96% reflective white paint.*

DOWNLIGHT SHIELDING OPTIONS:

- **WCB** White Cross Blade Baffle, 87 cell baffles spaced 0.5″ apart and finished with 96% reflective white paint.
- **SSL** *Semi Specular Louver, 44 cell louvers spaced 1.0″ apart.*

ACCESSORY: *Optional Dust Cover, clear acrylic, T8 lamps only. NOTE: Will significantly impact light level performance. Consult Factory.*

ELECTRICAL: 120 or 277 volt prewired. Fixture and electrical components UL/C-UL listed and fixture will bear UL/C-UL labels. *Optional Adders: low profile 347 volt ballast, prewired dual circuit, emergency circuits, low profile emergency battery packs. Consult Factory.*

LAMPING: Available in 1, 2 or 3 T8, T5 or T5HO lamp cross sections.

BALLAST: Electronic instant start low profile ballasts <20%THD standard. *Optional Adders: Rapid start, low profile dimming ballasts (controls by others). Consult Factory.*

MOUNTING OPTIONS: (FA) Fully Adjustable aircraft cable standard (50″). Lengths up to 150″ are available. Mounting connects to fixture with factory installed curved balancer, which allows for side to side fixture leveling and locks it into place. NOTE: curved balancer assembly is 4″ above top of fixture.

Optional: (AC) Semi-adjustable aircraft cable (± 0.5″) in lengths of 12″, 15″, 18″, 21″, 24″, 27″, 30″, 36″.

SUPPORT CABLES: Stainless steel with plated hardware.

FEED: 18 gauge straight cord. 14 gauge feed cord used when fixture current exceeds 6 amps. *Optional Adders: Coil Cord Feed.*

FINISHES: Finelite Signal White standard. *Optional Adders: 185 colors available from Tiger Drylac's RAL color chart.*

LENGTHS: 4′, and 8′ section lengths can be combined to make longer runs. Contact factory for additional lengths.

WEIGHT: Fixture weight = 3.0 lb/ft. with flat endcaps.

WALL MOUNT: Complimentary wall mount available.

ORDERING INFORMATION (2) – S16 – WCB – 32 – 2T8 – SC – 91W – OPEN – 277 – FA – FE

- Quantity
- Finelite **Series 16**
- Shielding (WCB, SSL)
- Run length (4′, 8′ multiples standard)
- Number of lamps in cross section (1, 2, 3 T8, T5 or T5HO)
- Circuiting (SC-single circuit, DC-dual circuit)
- Reflector System (91W, EP, WSO)
- Uplight Optical Controls (Open, CCO, STO, TDO)
- Voltage (120, 277, 347 Volt)
- Mounting (FA/AC/Stem)
- Endcap FE (flat), EE (extended)

Finelite, Inc. ◇ 30500 Whipple Road ◇ Union City, CA 94587-1530 ◇ 510 / 441-1100 ◇ FAX: 510 / 441-1510 ◇ www.finelite.com

NEO-RAY™

Catalog #	
Project	
Comments	
Prepared by	

NAOMI MILLER
LIGHTING DESIGN

Fixture Type: L8

DESCRIPTION

Series 14 offers fixtures for pendant mounted applications. Used individually or in continuous illuminated runs and patterns, each fixture is uniquely suited to achieve many functional and aesthetic spatial effects. Features include:
- Separate direct and indirect lamp chambers for 3 distinct distributions.
- The light is continuous and broken.
- Individual units and runs are provided to the nearest foot.
- Patterns are created by butting standard length fixtures.
- The trim is rigid "U" shaped, double formed with a 3/8" regress soft lit edge; housing may be ordered custom finished.

SPECIFICATION FEATURES

A ... Construction
20-gauge steel housing. Nominal 3', 4', 6' or 8' illuminated sections.

B ... Shielding
White bold baffle louver. White acrylic diffuser. Prismatic acrylic lens. Parabolic baffle shielding.

C ... Electrical
120, 277, 347 or Universal Voltage electronic ballast. Fixtures and electrical components certified to UL and CUL standards.

D ... Finish
Durable, low gloss, white, powder coated acrylic finish.

End Caps
20-gauge steel construction.

Mounting
Pendant with single stem (standard) or single cable. Canopy: Round 5-1/2" diameter.

Geo
14-DIP

2, 3 & 4T8
2, 3 & 4T5
2, 3 & 4T5HO

SUSPENDED
DIRECT-INDIRECT

Light Distribution
Indirect - 49.0%
Direct - 51.0%

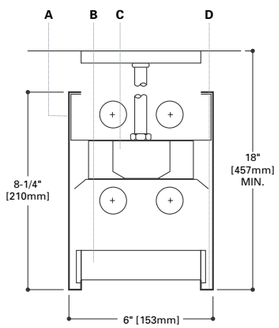

ORDERING INFORMATION

Sample Number: 14DIP-21T8-ST40-1EB-SI-S58

Series
14= Geo

Light Output
DI= Direct/Indirect

Mounting
P= Pendant

Number of Lamps Up
1= 1 Lamp
2= 2 Lamps

Number of Lamps Down
1= 1 Lamp
2= 2 Lamps

Lamp Type
T8= T8
T5= T5
T5HO= T5HO

Pendant
SC= Single Cable
ST= Single Stem[1]

Run Length
Overall Nominal Run Length __ ft.

Voltage [2]
1= 120V
2= 277V
3= 347V

Ballast
EB= Electronic Ballast
DB= Dimming Ballast

Switching Options
SI= Single Switching
DU= Double Switching

Emergency
EM= Emergency Pack

Fusing
GLR= GLR
GMF= GMF

Shielding Options
S22= Acrylic Diffuser
S58= KSH-12 Acrylic Lens
S72= Bold Baffle
S79= Parabolic Baffle

Notes: 1 Available with 7° or earthquake 45° swivel canopy assembly.
2 Not all options available. Please consult your Cooper Lighting Representative for availability.

NAOMI MILLER
LIGHTING DESIGN

Fixture Type: L8

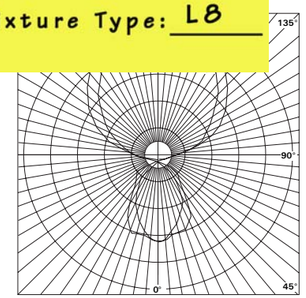

14DIP
(3) F40T12/RS/WW
(2 lamp up, 1 lamp down)
3200 Lumens

Efficiency 58.0%

Test Report
#2968.0

Coefficients of Utilization

Effective floor cavity reflectance 20%

rc	80%				50%			30%		
rw	70	50	30	10	50	30	10	50	30	10
RCR										
1	63	60	58	56	42	41	39	31	30	29
2	58	53	49	46	37	35	33	28	26	25
3	53	47	42	39	33	31	28	25	23	22
4	49	42	37	33	30	27	25	22	20	19
5	45	37	32	29	27	24	21	19	16	18
6	41	34	29	25	24	21	19	18	16	15
7	38	31	26	22	22	19	17	17	15	13
8	35	28	23	20	20	17	15	15	13	12
9	33	25	21	17	18	15	13	14	12	10
10	31	23	19	16	17	14	12	13	11	09

Zonal Lumen Summary

Zone	Lumens	%Lamp	%Fixture
0-30	348	0.0	0.0
0-40	1020	0.0	0.0
0-60	1444	3.0	4.0
0-90	1646	2.0	0.2
0-120	2682	27.9	41.1
0-180	65290	58.0	100.0

Total Luminaire Efficiency = 58.0%

Candela

Angle	Along ∥	45°	Across ⊥
0	983	983	983
5	1008	1010	1004
15	961	532	561
25	556	756	674
35	617	552	467
45	585	326	254
55	331	200	180
65	203	124	112
75	74	58	50
85	17	17	12
90	0	0	0
95	54	54	54
105	307	620	198
115	677	669	459
125	1004	984	764
135	1218	1153	981
145	1445	1379	1237
155	1555	1504	1408
165	1597	1583	1523
175	1591	1588	1583
180	1559	1559	1559

MOUNTING INFORMATION

OUNTING

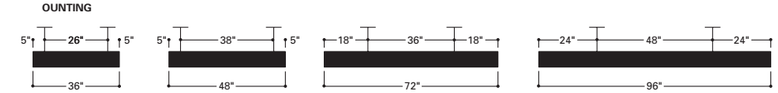

(INDIVIDUAL FIXTURE ONLY)
CONSULT FACTORY FOR CONTINUOS
RUN APPLICATIONS

TYPICAL STE LOCATIONS

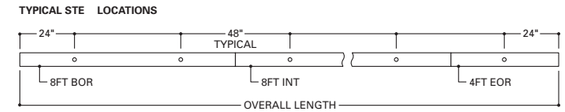

SHIELDING INFORMATION

S Acrylic Diffuser
3/16" thick, matte white finish, rabbeted joints, no light leaks.

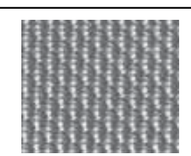

S58 Acrylic Lens
1/8" thick, clear acrylic prismatic lens.

S7 Bold Baffle
1" high x 1.2"o.c., 3/16" thick aluminum baffle, continuous and unbroken, no visible joints.

S79 Para2olic Baffle
1-1/4" high blades. 2.4" o.c., semi-specular lo-brightness Pearlescent Aluminum baffle. Continuous and unbroken, no visible joints.

Product Information Bulletin

LINEARlight MULTI FLEX

Flexible LED Strip

NAOMI MILLER
LIGHTING DESIGN

Fixture Type: L9

- Long life: Up to 50,000 hours with proper thermal management
- Entire strip consists of 96 LEDs
- Length of entire strip is 3.17 ft. (965 mm)
- Available in warm white and cool white color temperatures
- Optimal operation with OPTOTRONIC® OT 24V power supplies (Literature code ECS050R1)
- Minimal heat generation
- Low profile <16.6 mm
- IP67 Rated
- RoHS Compliant

The OSRAM SYLVANIA LINEARlight MULTI FLEX provides new dimensions for innovative lighting.

LINEARlight MULTI FLEX modules offer exciting new possibilities for general illumination applications. They provide an alternative choice for linear applications such as cove lighting, refrigeration cases and pathway marking.

LINEARlight MULTI FLEX modules are ideal for edge lighting transparent and diffuse materials. They provide an optimal solution for precise backlighting of complex contours. They can also be used for lifesaving/rescue sign lights and commercial signs and for marking contours like escape routes, borders and stairs.

OPTOTRONIC® power supplies from OSRAM SYLVANIA are specially designed to operate the LINEARlight MULTI FLEX modules. A wide range of 24V power supplies are available.

Product Availability

Product	Maximum Wattage	Color
LLMULTIFLX/THN/W3-827-3.2FT	6W per module	White-2700K
LLMULTIFLX/THN/W3-865-3.2FT	6W per module	White-6500K
LLMULTIFLX/THN/W3-880-3.2FT	6W per module	White-8800K

Mounting Accessories

LLMULTIFLX/INSTALL-SCREWS – used with all products
LLMULTIFLX/INSTALL-TOOL – used with all products
LLMULTIFLX/STR-CHANNEL-3.2 FT – used with 70182 and 70205
LLMULTIFLX/THN/FLX-CHANNEL-3.2 FT – used with 70181
LLMULTIFLX/THN/STR-CHANNEL-3.2 FT – used with 70182 and 70205

Note: All products can fit in all channels and be secured with small screw, but it is not recommended for ultimate performance.

Application Information

Applications

Cove lighting
Edge lighting transparent/diffuse materials
Border marking
Commercial signs
Emergency/Rescue signs
Path & contour marking
Backlighting complex contours
Refrigeration cases
Display shelves
Recessed lighting

Power Supply Information

OT20/120-240/24S (NAED 51512)
OT75/120/24 (NAED 51513)
OT75/120-277/24E (NAED 51514)
OT96/120-277/24 (NAED 51511)
OT240/120-240/24/CH3 (NAED 51515)
OT DIM (NAED 51516)

OSRAM SYLVANIA

LED062R1 7/07

NAOMI MILLER
LIGHTING DESIGN

Fixture Type: L9

Symbol	Values
T_{op}	-10… +40°C (-18…104°F)
T_{stg}	-40… +85°C (-22…185°F)
V_{max}	23 - 25 V_{dc}

1. Temperature should be measured at any point on the module. Operating temperature range for red and yellow modules is -30°C to +85°C.
2. The maximum operating range at any point (up to 75°C) is to specify the absolute maximum Tc temperature without causing permanent damage to the LEDs.

*Maximum rated life can be achieved if maximum temperature does not exceed 40°C.

Dimensions

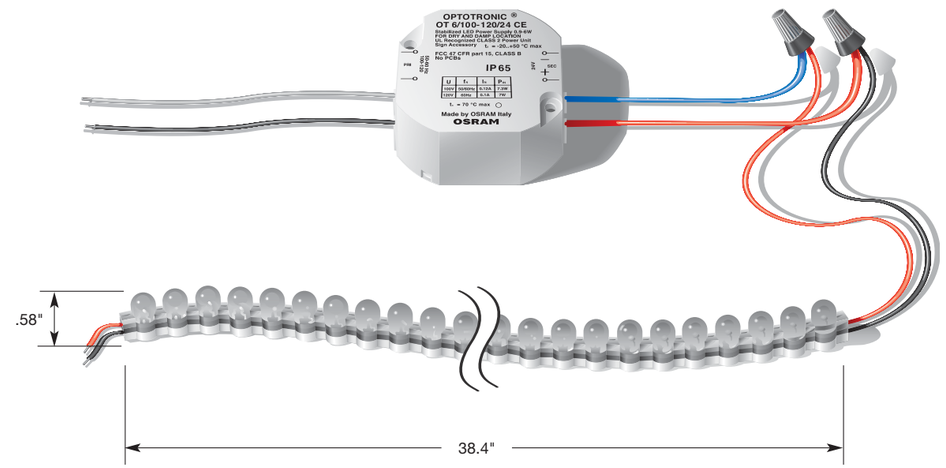

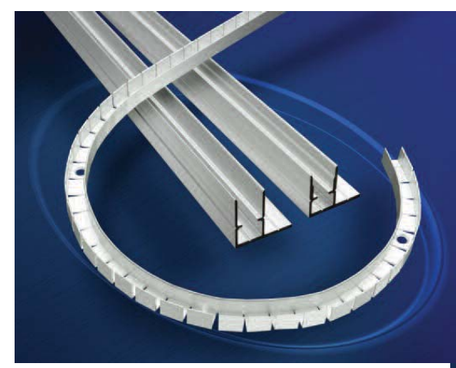

Item Number	Ordering Abbreviation	Description
70206	LLMULTIFLX/STR-CHANNEL	Used with 70182 & 70205
70187	LLMULTIFLX/THN/FLX-CHANNEL	Used with 70181
70188	LLMULTIFLX/THN/STR-CHANNEL	Used with 70182 & 70205

LLMULTIFLX/INSTALL-SCREWS	70220
LLMULTIFLX/INSTALL-TOOL	70207

NAOMI MILLER
LIGHTING DESIGN

Fixture Type: L9

mponents must not be subjected to mechanical stress.

estroy conducting paths.

protection against short circuits, overload or overheating. Therefore, it is absolutely necessary to operate the modules with an electrically stabilized power supply offering protection against the above mentioned safety risks. OSRAM OPTOTRONIC power supplies are specifically designed with protection features for safe operation. Use of third party power supplies is not recommended.

4. Installation of the LED Modules and OSRAM LED power supplies should adhere to all applicable electrical and safety standards. Only qualified personnel should perform installations.
5. Correct electrical polarity needs to be observed. Incorrect polarity may destroy the module.
6. All LED modules, up to the maximum number allowable for the power supply, should be installed in a parallel electrical connection (red to red and black to black), with a maximum of three modules in series. See note #2 in the Electrical Connection section below.
7. Pay attention to standard ESD precautions when handling and installing the module.
8. Only install according to the parameters outlined in the Assembly Information section.

Assembly Information

For complete installation requirements, refer to the LINEARlight MULTI FLEX User Guide

Precautions

1. The LED module will not stretch like ordinary rubber. Stretching will cause damage to the internal circuits.
2. Do not pull on the lead wires as there is risk of damage to the circuit.
3. Bending of the module can be accomplished only at the spaces between the LED. Avoid strained angles. Do not bend the LED module in the vertical axis.
4. Apply even force over the entire LED module when inserting into an aluminum channel.

Power Supply Selection

1. Refer to the section Power Supply Ordering Information for identification of the power supply requirement for a specified LED load.
2. The LINEARlight MULTI FLEX requires a 24Vdc Power supply. Each LED module has a maximum load rating of 6 watts. Do not operate an LED load in excess of the capacity of the power supply.

Electrical Connection

1. The LED module is equipped with polarized wires (red – positive, black – negative). Connect the low voltage load side of the power supply to the LED module ensuring correct polarity of the electrical connection. Crimp style or wire nut may be used along with insulating tape or shrink tubing.
2. Up to 3 LED modules can be connected in series to a single power feed connection. For large installations, connect multiple (3 module sets) in parallel.

Cutting

1. Cutting the LINEARlight MULTI FLEX LED module is possible every 6 LEDs. Please refer to the LINEARlight MULTI FLEX User Guide for the exact location.
2. Apply silicone sealant after cutting the module.
3. Each module can be cut into no more than two workable sections. You must maintain the end sections with the existing leads. Middle sections without leads cannot be used.

NAOMI MILLER
LIGHTING DESIGN

Fixture Type: L9

ing and Specification Information

rdering bbreviation		Color	Max. Watts	Volts (Vdc)	Current (Amps)	Viewing Angle (°)	Number of LEDs	Color Temp (K)	Luminous Flux (lm)	Lumens per foot	Width (mm)
	LMULTIFLX/THN/W3-827-3.2FT	white	6.0	24	0.25	45	96	2700	83	26	8
	LMULTIFLX/THN/W3-865-3.2FT	white	6.0	24	0.25	45	96	6500	180	56	8
70181	LLMULTIFLX/THN/W3-850-3.2 FT	white	6.0	24	0.25	45	96	8800	88	28	7

Mounting Accessories

Item Number	Product Description	Length (mm)	External Width (mm)	Height (mm)	Internal Width (mm)	Base Width (mm)
70220	LLMULTIFLX/INSTALL – SCREWS					
70207	LLMULTIFLX/INSTALL – TOOL					
70206	LLMULTIFLX/STR-CHANNEL – 3.2 FT**	1000	9	18.5	8	20
70187	LLMULTIFLX/THN/FLX-CHANNEL – 3.2 FT*	1000	9	9	7	8
70188	LLMULTIFLX/THN/STR-CHANNEL – 3.2 FT**	1000	9	16.5	8	20

* Flex channel only used with 70181
** 70206 and 70188 can be used with 70205 and 70182

Power Supply Ordering Information

	OPTOTRONIC® 20W (51512)			OPTOTRONIC 75W (51513, 51514)			OPTOTRONIC 96W (51511)		
LED Module	No. of Modules	Max. Length (ft)	Load Wattage (w)	No. of Modules	Max. Length (ft)	Load Wattage (w)	No. of Modules	Max. Length (ft)	Load Wattage (w)
LLMULTIFLX/THN/W3-XXX-3.2 FT	3	9.6	18	12	3.2	72	16	3.2	96

XXX represents color temperature.
Packaging information: Case qty.: 10 Min. order qty.: 1

Ordering Guide

LL MULTI FLEX	/	THN	/	W 3-888
LINEARlight MULTI FLEX				White 8500K

OSRAM SYLVANIA
National Customer
Service and Sales Center
18725 N. Union Street
Westfield, IN 46074

Industrial Commercial
Phone: 1-800-255-5042
Fax: 1-800-255-5043

National Accounts
Phone: 1-800-562-4671
Fax: 1-800-562-4674

OEM/Specialty Markets
Phone: 1-800-762-7191
Fax: 1-800-762-7192

Display/Optic
Phone: 1-888-677-2627
Fax: 1-800-762-7192

In Canada
OSRAM SYLVANIA LTD.
Headquarters
2001 Drew Road
Mississauga, ON L5S 1S4

Industrial Commercial
Phone: 1-800-263-2852
Fax: 1-800-667-6772

Special Markets
Phone: 1-800-265-2852
Fax: 1-800-667-6772

Visit our website: www.sylvania.com

NEO-RAY™

DESCRIPTION

The optical design of the 74IC Cove Series is based on experience and knowledge of near field geometry and photometry. Actual performance of the 74IC Cove speaks louder than even what the photometric reports indicate...a smooth gradation of light is emitted to the back of the wall behind the cove to the far reaches of the ceiling above and in front of the cove...and this without the hint of lamp socket shadows.

Catalog #	
Project	
Comments	
Prepared by	

NAOMI MILLER
LIGHTING DESIGN

Fixture Type: L10

SPECIFICATION FEATURES

A ... Construction
Housing is die-formed 20-gauge cold rolled steel. Nominal 3', 4', 6', or 8' illuminated sections.

B ... Reflector
Specular aluminum and white steel assembly.

C ... Electrical
120, 277, 347 or Universal Voltage electronic ballast. Luminaires and electrical components certified to UL and CUL standards.

D ... Finish
Durable, low gloss, white, powder coated acrylic finish.

Mounting
Lay-in at wall cove. Lay into base of cove or mount vertically firing downward to illuminate wall from soffit.

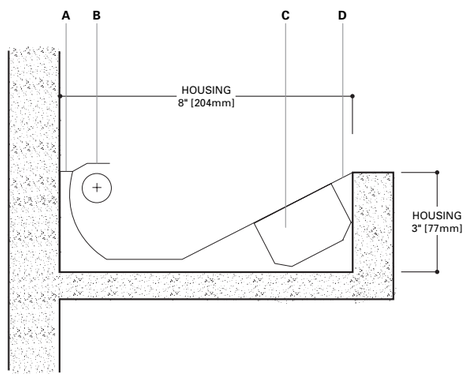

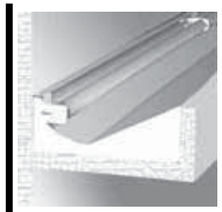

Cove
74-IC

1T8

Cove
Indirect

Light Distribution:
Indirect - 100.0%
Direct - 0.0%

ORDERING INFORMATION

Sample Number: S74IC/1T8/84/1EB-SI

Series
74: Cove

Light Output
I: Indirect

Mounting
C: Cove

Number of Lamps
1: 1 Lamp

Lamp Type
T8: T8

Run Length
Overall Nominal Run Length __ ft.

Voltage [1]
1: 120V
2: 277V
3: 347V

Ballast
EB: Electronic Ballast
DB: Dimming Ballast

Switching Options
SI: Single Switching

Emergency
EM: Emergency Pack

Fusing
GLR: GLR
GMF: GMF

Notes: 1 Not all options available. Please consult your Cooper Lighting Representative for availability.

DECORATIVE

INVUE™

MSA
MESA

42-400W

Metal Halide
Pulse Start Metal Halide
High Pressure Sodium
Compact Fluorescent
Electrodeless Fluorescent

DECORATIVE AREA LUMINAIRE

DARK SKY COMPLIANT — CO Cutoff

- Die-cast aluminum main housing and cast aluminum spider mount base
- Top mounted, heavy wall, die-cast aluminum door
- Impact resistant 1/8" tempered clear or optional frosted flat glass
- Toolless entry to housing is provided via two (2) flush mounted quick release latches
- Choice of five (5) high efficiency segmented optical systems constructed of premium 95% reflective anodized aluminum sheet
- Fitter assembly mounts over 3" O.D. Tenon via three (3) concealed, stainless steel set screws and provides seamless transition to 4" round poles
- 50-175W HID lamp sources feature medium-base lampholders while 250-400W feature mogul-base lampholders
- Approximate net weight: 50 lbs. (22 kgs.)

NAOMI MILLER
LIGHTING DESIGN

Fixture Type: P1,P2

DESCRIPTION

The simple geometric form of MESA allows it to adapt to either contemporary or traditional architectural settings. Available in single or twin pole mount configurations with optional wall mounting capability, MESA mounting options allow for harmonized site design whether at the entryway or in the parking lot.

DIMENSIONS

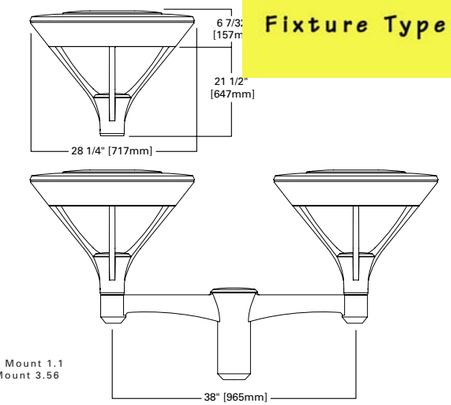

EPA-Effective Projected Area: Single Mount 1.1
Dual Mount 3.56

ORDERING INFORMATION

SAMPLE NUMBER: MSA-50-MH-480-4S-VS-AP

Product Family
MSA=MESA Slipfits over 3" O.D. tenon

Lamp Wattage [1]
HID
50=50W
70=70W
100=100W
150=150W
175=175W
250=250W
320=320W [2]
350=350W
400=400W [3]
Compact Fluorescent
42=42W [4]
57=57W [4,5]
114=(2) 57W [6]
120=(2) 60W [6]
140=(2) 70W [6]
170=(2) 85W [6]
240=(2) 120W [6]
Electrodeless Fluorescent
85=85W [7]

Lamp Type
MH=Metal Halide
MP=Pulse Start Metal Halide
HPS=High Pressure Sodium
CF=Compact Fluorescent [8]
QL=Electrodeless Fluorescent

Voltage [9]
120=120V
208=208V
240=240V
277=277V
347=347V
480=480V
DT=Dual-Tap Wired 277V [10]
MT=Multi-Tap Wired 277V [11]
TT=Triple-Tap Wired 347V [12]
UNV=120-277V Universal Electronic Ballast

Optical System
2S=Type II
3S=Type III
4S=Type IV
5S=Type V
SL=Forward Throw Spill Light Eliminator

Lens Type
FG=Flat Glass
FR=Frosted Flat Glass
SG=Sag Glass
FRS=Frosted Sag Glass
VS=Polycarbonate Vandal Shield [13]

Colors [14]
(add as suffix/ must specify)
BK=Black
AP=Grey
BZ=Bronze
WH=White
DP=Dark Platinum
GM=Graphite Metallic
GN=Hartford Green

Options & Accessories
(See Below)

Options [15]
F=Single Fuse (120, 277 or 347V) Specify Voltage
FF=Double Fuse (208, 240 or 480V) Specify Voltage
Q=Quartz Restrike [16]
EM=Quartz Restrike with Time Delay (Also Strikes at Cold Start) [16]
EM/SC=Quartz Emergency Separate Circuit [16]
42CF/EM=Emergency Battery Backup (Specify 120 or 277V) [17]
R=NEMA Twistlock Photocell Receptacle
PC=Button Type Photocontrol (Specify Voltage)
DS=Dual Fluorescent Switching Control [18]
HS=House Side Shield [19]
L=Lamp Included

Accessories [20]
OA/RA1016=NEMA Photocontrol—Multi-tap
OA/RA1027=NEMA Photocontrol—480V
OA/RA1201=NEMA Photocontrol—347V
VA6028-XX=Dual Mount Arm [EPA 1.36]
VA6029-XX=Wall Mount Arm

Certifications

IP66 Rated	U.L. 1598 Listed	2G Vibration Tested	CO Cutoff
CSA Listed	25°C Ambient	ISO 9001	

WATTAGE TABLE	MSA
Metal Halide	50, 70, 100, 175, 250, 400W
Pulse Start Metal Halide	250, 320, 350, 400W
High Pressure Sodium	50, 70, 100, 150, 250, 400W
Compact Fluorescent	42, 57, (2) 57, (2) 60, (2) 70, (2) 85, (2) 120W
Electrodeless Fluorescent	85W

NOTES: **1** 50-175W HID lamps use medium-base lampholders. 250-400W HID lamps use mogul-base lampholders. **2** 320W and 350W Pulse Start Metal Halide lamps only. **3** 400W Metal Halide requires reduced envelope ED28 lamp. **4** Available in Type 3S, 4S, and 5S distributions only. **5** Nominal M.O.L lamp length of 57W CFL not to exceed 7". **6** Dual Compact Fluorescent lamp options available in Type 4S distribution only. **7** Electrodeless Fluorescent QL lamp only. Available in Type 3S and 5S distributions only. 120V only. **8** Compact Fluorescent ballasts contain internal fusing. No supplemental fusing is necessary. CF ballasts are 120 through 277V. Specify with UNV voltage designation. **9** Products also available in non-US voltages and 50Hz for international markets. Consult factory for availability and ordering information. **10** Dual-tap is 120/277V wired 277V. **11** Multi-tap is 120/208/240/277V wired 277V. **12** Triple-tap is 120/277/347V wired 347V. **13** Maximum wattage of 250W HID. **14** Custom and RAL color matching available upon request. Consult your INVUE Lighting Systems Representative for further information. **15** Add as suffix in the order shown. **16** Quartz options not available with SL optic. **17** CF lamps only. Battery backup operates 90 minutes at minimum 32°F (0°C), 42W maximum. Type 3S, 4S, 5S optics only. Must specify 42W Compact Fluorescent lamp. **18** Dual switching requires dual 57W or dual 70W Compact Fluorescent lamps. Allows independent switching control of each lamp through use of two (2) electronic ballasts. Allows 50% power reduction when dual ballasts are independently wired and controlled. **19** House side shield not available on 5S and SL optics. **20** Order separately, replace XX with color suffix. **21** Specifications and dimensions subject to change without notice.

Notes:

Job:
Type:

NAOMI MILLER
LIGHTING DESIGN

Fixture Type: P3,P4

FORM TEN SQUARE

HPV SERIES - HIGH PERFORMANCE VERTICAL

GENERAL DESCRIPTION: The Gardco square arm mounted high performance vertical products are sharp cutoff luminaires for high intensity discharge lamps up to 1000 watts. The HPV units are dieformed aluminum and finished with a TGIC Polyester powdercoat. The HPV can accept one of two (2) interchangeable and rotatable precision segmented optical systems. These optical systems utilize principles of Gardco's patented Form 10X technology applied to vertical lamp optics. The result yields the highest performance possible from a full cutoff vertical lamp system.

ORDERING

Flat glass lens luminaires meet IESNA Full Cutoff criteria. Sag lens luminaires meet IESNA Cutoff criteria.

PREFIX	CONFIGURATION	DISTRIBUTION	WATTAGE	VOLTAGE	FINISH	OPTIONS

Enter the order code into the appropriate box above. Note: Gardco reserves the right to refuse a configuration. Not all combinations and configurations are valid. Refer to notes below for exclusions and limitations. For questions or concerns, please consult the factory.

PREFIX

HPV23

CONFIGURATION

1	Single Pole Mount
2	Twin Pole Mount at 90°
2@180	Twin Pole Mount at 180°
3	3-way Pole Mount at 90°
3@120°	3-way Pole Mount at 120°
4	4-way Pole Mount

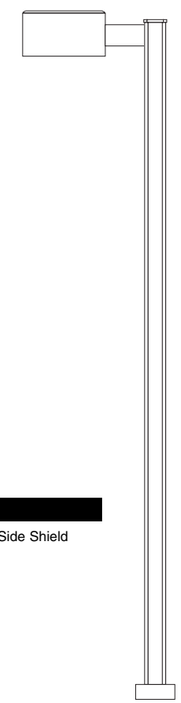

DISTRIBUTION

Flat Lens (Full Cutoff)		*Sag Lens (Cutoff)*	
3XVF	Type III	**3XVS**	Type III
5XVF	Type V	**5XVS**	Type V

WATTAGE

400MH	**400PSMH**	**400HPS**
1000MH*	**750PSMH**	**750HPS**
	875PSMH	
	1000PSMH	

MH - Metal Halide
PSMH - Pulse Start Metal Halide
HPS - High Pressure Sodium

*Requires E37 / BT37 reduced jacket lamp.

VOLTAGE

120
208
240
277
347
480

FINISH

BRP	Bronze Paint
BLP	Black Paint
WP*	White Paint
NP*	Natural Aluminum Paint
OC*	Optional Color Paint (*Specify RAL designation ex: OC-RAL7024)*
SC*	Special Color Paint *(Specify. Must supply color chip)*

** Contact factory for availability of White (WP), Natural Aluminum (NP), Optional (OC) and Special (SC) colors*

OPTIONS

EHSS	External House Side Shield
LF	In-Line Fusing

A Genlyte Company

Gardco Lighting
1611 Clovis Barker Road
San Marcos, TX 78666

(800) 227-0758
(512) 753-1000
FAX: (512) 753-7855
www.sitelighting.com

GARDCO LIGHTING

79115-139/0306

NAOMI MILLER
LIGHTING DESIGN

Fixture Type: P3,P4

FORM TEN SQUARE

HPV SERIES - HIGH PERFORMANCE VERTICAL

SPECIFICATIONS

GENERAL: Each Gardco HPV Luminaire is a sharp cutoff luminaire for high intensity discharge lamps. Internal components are totally enclosed, rain-tight, dust-tight, and corrosion resistant. No venting of the optical system or electrical components is required or permitted. Lamping requires no lifting or hinging of the luminaire housing, disturbing wiring or exposing uninsulated live parts.

HOUSING: The housing wrapper is one-piece dieformed aluminum with an integral reinforcing spline and no welded corners. Silicone seals provide a weathertight seal at all points of material transition.

ARM: Extruded aluminum arm is prewired and secured to fixture by contractor.

LENS: A mitered, extruded anodized aluminum door frame retains the optically clear, heat and impact resistant tempered flat glass in a sealed manner using hollow section, high compliance, memory retentive extruded silicone rubber. A sag glass lens is provided on vertical lamp cutoff luminaires and a flat glass lens is provided on vertical lamp full cutoff luminaires. Stainless Steel spring hinge pins permits access to the luminaire without tools.

OPTICAL SYSTEMS: The segmented reflector system consists of highly specular aluminum facets precisely aligned to achieve specified photometric distributions. The entire optical system is field rotatable in 90° increments without tools.

Optical systems feature a field adjustable lamp socket. In the lower socket position, optics provide a cutoff distribution, and require a sag glass lens. When the socket is in the upper position, with a flat glass lens, the optics provide a distribution meeting IES Full Cutoff.

Luminaires ship from the factory with the socket in the upper position.

Luminaires ordered with the 5XVF and 3XVF optical systems ship from the factory with a standard flat glass lens and door frame. Luminaires ordered with the 5XVS and 3XVS optical systems ship from the factory with a standard sag glass lens and door frame.

Luminaires are easily converted in the field by changing the lens and socket position. For a flat glass full cutoff luminaire, a flat glass lens and door frame with the socket in the upper position are needed. For a sag glass cutoff luminaire, a sag glass lens and door frame with the socket in the lower position are required. Maximum performance with a sag glass lens requires the socket to be placed in the lower position. Conversion does not require replacement of the reflector assembly.

ELECTRICAL: Each high power factor ballast is the separate component type capable of providing reliable lamp starting to -20°F/-29°C. Entire ballast assembly is secured within the luminaire, above the reflector system. Metal Halide ballasts are medium regulation autotransformer providing +10% power regulation with +10% variation from rated input voltage. Component-to-component wiring within the luminaire will carry no more than 80% of rated current and is listed by UL for use at 600 VAC at 150° or higher. Plug disconnects are listed by UL for use at 600 VAC, 15A or higher.

FINISH: Each luminaire receives a fade and abrasion resistant, electrostatically applied, thermally cured, triglycidal isocyanurate (TGIC) powdercoat finish.

LABELS: All luminaires bear UL or CUL (where applicable) Wet Location labels.

DIMENSIONS

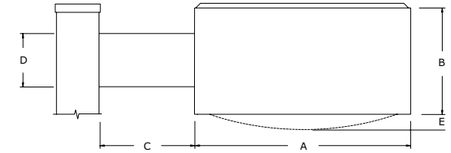

Width	B	C	D	E
23"	14.5"	12"	8"	2"
58.42 cm	36.83 cm	30.48 cm	20.32 cm	5.08 cm

	EPA's (ft^2)			Approximate Weight (lbs)
	Single	Twin	3/4	Single
Sag Lens	3.9 ft^2	7.8 ft^2	9.5 ft^2	104 lbs
	0.36 m^2	0.72 m^2	0.88 m^2	47 kg
Flat Lens	3.6 ft^2	7.3 ft^2	8.8 ft^2	90 lbs
	0.33 m^2	0.68 m^2	0.82 m^2	41 kg
Flat Lens w/HS Shield	4.9 ft^2	9.9 ft^2	12.5 ft^2	93 lbs
	0.46 m^2	0.92 m^2	1.16 m^2	72 kg

A Genlyte Company

Gardco Lighting
1611 Clovis Barker Road
San Marcos, TX 78666

(800) 227-0758
(512) 753-1000
FAX: (512) 753-7855
www.sitelighting.com

GARDCO LIGHTING

79115-139/0306

NAOMI MILLER
LIGHTING DESIGN

Fixture Type: P5

S56-SFX

Serenade DSX Series

The Serenade DSX Series evokes memories of the lighting of the past, having the appearance of a gently glowing acorn. But the historically inspired acorn shape encompasses a sophisticated reflector and refractor system. Superior efficiency and IES cutoff are two of the many benefits this optical system offers. Having as low as 1% uplight sets the Serenade DSX apart from imitators, while increased efficiency can help reduce energy usage. IP66 sealed optical system keep the optics free of contaminants, ensuring performance for years to come.

- **Glass globe with no exterior prism**
- **Cutoff optical system having as low as 1% uplight with DSX optics**
- **DSH optics maximize spacing**
- **Superior efficiency & lighting uniformity**
- **Toolfree access & IP66 sealed optical chamber**

> For the latest updates go to www.lumec.com

> Luminaires *(Luminaires are UL and CSA approved)*

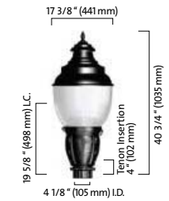

S55-SFOK
EPA: 2.25 sq. ft.
Weight: 58 lbs (26.31 kg)

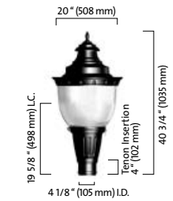

S55-SFX-CR55
EPA: 2.50 sq. ft.
Weight: 63 lbs (28.58 kg)

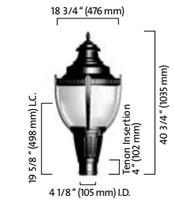

S55C1-SFX
EPA: 2.60 sq. ft.
Weight: 62 lbs (28.12 kg)

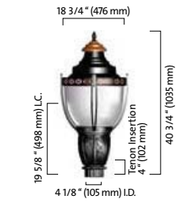

S55C2-SFOK-CPTC-CUC
EPA: 2.57 sq. ft.
Weight: 62 lbs (28.12 kg)

*> **These globes are available with the following materials** / **GL :** Glass / **PC :** Clear polycarbonate / **ACDR :** Acrylic DR*

> HID Lamps *(High Intensity Discharge)*

	GL				ACDR / PC			
Wattage	**DSX3**	**DSX5**	**DSH3**	**DSH5**	**DSX3**	**DSX5**	**DSH3**	**DSH5**
50 MH, medium	✓	✓	✓	✓	✓	✓	✓	✓
70 MH, medium	✓	✓	✓	✓	✓	✓	✓	✓
100 MH, medium	✓	✓	✓	✓	✓	✓	✓	✓
150 MH, medium	✓	✓	✓	✓	✓	✓	✓	✓
175 MH, mogul	✓	✓	✓	✓	✓	✓	✓	✓
200 MH, mogul	✓	✓	✓	✓	N/A	N/A	N/A	N/A
250 MH, mogul	✓	✓	✓	✓	N/A	N/A	N/A	N/A
35 HPS, medium	✓	✓	✓	✓	✓	✓	✓	✓
50 HPS, mogul	✓	✓	✓	✓	✓	✓	✓	✓
70 HPS, mogul	✓	✓	✓	✓	✓	✓	✓	✓
100 HPS, mogul	✓	✓	✓	✓	✓	✓	✓	✓
150 HPS, mogul	✓	✓	✓	✓	✓	✓	✓	✓
200 HPS, mogul	✓	✓	✓	✓	N/A	N/A	N/A	N/A
250 HPS, mogul	✓	✓	✓	✓	N/A	N/A	N/A	N/A

✓: Available **N/A:** Not available

> Optical system *(Lamps not included)*

DSX Optics
Optical system made of a hydroformed reflector sealed on a prismatic globe.

DSX3 / Asymmetrical : Cutoff
DSX5 / Symmetrical : Cutoff
> House shield available in option (HS)

DSH Optics
Optical system made of a hydroformed reflector sealed on a prismatic globe.

DSH3 / Asymmetrical : Extensive Non-Cutoff
DSH5 / Symmetrical : Extensive Non-Cutoff
> House shield available in option (HS)

* Photometry available on Lumec web site www.lumec.com

NAOMI MILLER
LIGHTING DESIGN

Fixture Type: P5

> QL Lamps

Wattage	**DSX5**
55QL	✓
85QL	✓

High frequency generator for induction lamp (4000K). Instant start. Operating range 50-60 Hz or DC. Lamp starting capacity of -40F (-40 °C). *(Lamps included)*

> Optical systems lamps QL *(Lamps included)*

DSX Optics
Optical system made of a hydroformed reflector sealed on a prismatic globe.

DSX5 / Symmetrical : Cutoff
> House shield available in option (HS)

* Photometry available on Lumec web site www.lumec.com

> Voltages

120 / 208 / 240 / 277 / 347* / 480*
** Not available for QL lamp*

> multi-tap ballast also available

> Adaptors

SFX

SFOK

> Maintenance

Access to internal component
The luminaire's hood can be opened by simply opening the latch located on the technical ring. The hood can then be pivoted along a hinge incorporated in the technical ring. For ease of maintenance, a retaining mechanism holds the globe at a 90° angle from the technical ring.

Access to lamp
A simple quarter-turn of the sealed optic shutter provides easy access to the lamp. Quick-disconnect terminals between the lamp and the ballast tray ensure safe and easy lamp replacement.

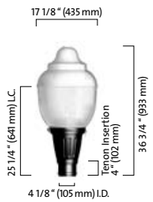

S56-SFX

EPA: 2.02 sq. ft.
Weight: 67 lbs (30.39 kg)

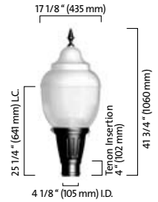

S56-SFX-FN10

EPA: 2.02 sq. ft.
Weight: 67 lbs (30.39 kg)

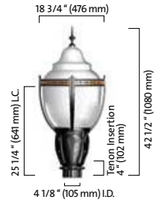

S56C1-SFOK-BSC-FN11

EPA: 2.37 sq. ft.
Weight: 71 lbs (32.21 kg)

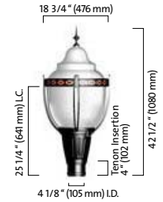

S56C2-SFX-CUC-FN11

EPA: 2.34 sq. ft.
Weight: 71 lbs (32.21 kg)

> *Luminaire options*

HS	House shield
BC	Block connector
TN3	Adaptor to fit over a 3" (76 mm) O.D. by 4" (102 mm) long tenon
TN3.5	Adaptor to fit over a 3 1/2" (89 mm) O.D. by 4" (102 mm) long tenon
FNC	Copper-colored painted finial
FS	Fusing (consult factory)
PH8	Photoelectric cell
S55C1/S55C2/S56C1/S56C2	
BS	Brass decorative band
BSC	Brass decorative band, protected by a polyester clear coat
CU	Copper decorative bands, located on the ring gard
CUC	Copper decorative band, protected by a polyester clear coat
S55/S55C1/S55C2	
CPT	Copper cupola
CPTC	Copper cupola, protected by a polyester clear coat
BST	Brass decorative cupola
BSTC	Brass decorative cupola, protected by a polyester clear coat
S55	
CR55	Decorative crown

FINIALS

> *Mountings*

(Consult the Pole Guide for details and the complete line of mountings)

> *Configurations*

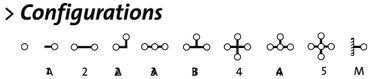

> *Finishes*

The specially formulated **Lumital** powder coat finish is available in a rar of many standard colors. *(Consult Lumec's Color Chart for complete specifications)*

> *Poles and Pole options*

(Consult the Pole Guide for details and the complete line of poles)

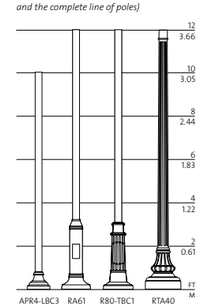

NAOMI MILLER
LIGHTING DESIGN

Fixture Type: P5

> *Ordering sample*

Luminaire	Lamp	Optical System	Voltage	Adaptor	Options	Mounting & configuration	Pole	Finish
S56-GL	100 HPS	DSX3	120	SFOK	FN10	CRA-1A	RTA40	BKTX

Access to ballast

The toolfree drop-in unitized ballast tray is slipped into the post top box which rests on the optical support plate. Here again, the use of quick-disconnect terminals ensures safe and easy ballast maintenance.

Access to PH8

Once the ballast tray is removed, tool-free access to the photoelectric cell (PH8) is then possible. Orienting the cell is also an easy step to achieve by simply turning the luminaire's technical ring in the desired position.

NAOMI MILLER
LIGHTING DESIGN

Fixture Type: P5

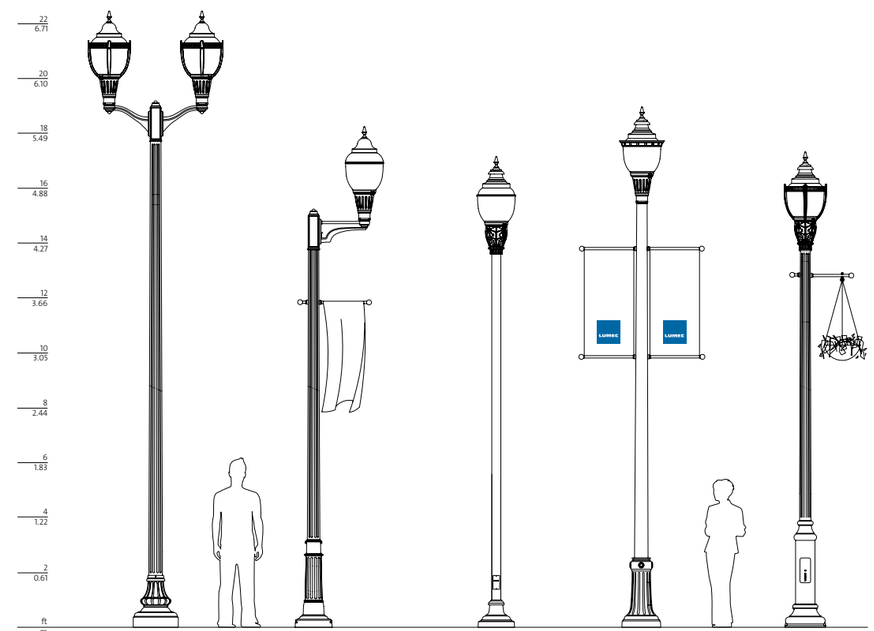

Luminaire: S56C2-SFX-FN10
Mounting: CRF-2
Pole: RTA50

Luminaire: S56-SFX-FN10
Mounting: CRC-1A
Pole: RTA800-BA

Luminaire: S55-SFOK-FN10
Pole: APR4-LBC3

Luminaire: S55-SFX-CR55-FN10
Pole: RTA126-BA

Luminaire: S55C1-SFOK-FN10
Pole: RTA61-PS

www.lumec.com

Lumec Head Office
640, Curé-Boivin Boulevard
Boisbriand, Québec
J7G 2A7 Canada

Tel. : (450) 430.7040
Fax : (450) 430.1453

A Genlyte Company

Some luminaires use fluorescent or high intensity discharge (HID) lamps that contain small amounts of mercury. Such lamps are labeled "Contains Mercury" and/or with the symbol "Hg." Lamps that contain mercury must be disposed of in accordance with local requirements. Information regarding lamp recycling and disposal can be found at **www.lamprecycle.org**

T5 ARCHITECTURAL HIGH-BAY

SERIES **GLA** T5

NAOMI MILLER
LIGHTING DESIGN

Fixture Type: Q6

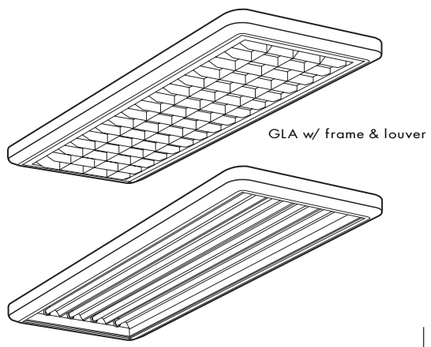

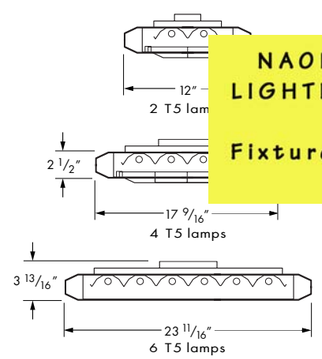

VOLTAGE _____

SPECIFICATIONS

- INNER HOUSING — 22 gauge die formed C.R.S.
- OUTER HOUSING — .060" thick extruded aluminum sides and ends, die cast aluminum corners
- REFLECTIVE SURFACES — Highly specular anodized MIRO 4™ aluminum reflector — white reflector optional
- FINISH — Non-glare white polyester powder coated exterior textured finish with multi-stage iron/phosphate prepared metal
- ELECTRICAL — Electronic ballast standard, programmed start T5, rated Class P
- LABELS — UL listed to U.S. and Canadian safety standards as fluorescent luminaire suitable for dry or damp locations
- MOUNTING — Pendant mount with Y-hanger and chain, aircraft cable, or 3/4" conduit utilizing hub and splice box adapter. GLA should be mounted at least 18" from the ceiling for ample access to electrical

FEATURES

- Stylish fixture, less than 4" deep, complements any up-scale architecture
- Optional 1" deep louver follows the contour of the extruded aluminum sides & ends to provide functional lamp shielding and a modern appearance
- Replaces 400 watt HID one-for-one with half the energy
- Mounting options include stem, chain, or aircraft cable
- Extruded aluminum door frame accepts many different types of shielding, up to 1/2" depth — hinges / spring cam latches
- Ideal for any space with medium to high mounting heights
- Uplight apertures provide uplight to illuminate the ceiling
- All parts painted after fabrication to facilitate installation, increase efficiency, and inhibit rusting

ORDERING INFORMATION

Submittal

	SERIES		NOM. LENGTH		TOTAL LAMPS	WATTAGE/ TYPE		OPTIONS		BALLAST		VOLTAGE
EXAMPLE:	GLA	-	4	-	4	54T5H	-	OPTIONS	-	EB4	-	UNV

SERIES

GLA	Architectural High-Bay

NOMINAL LENGTH

4	4'

TOTAL LAMPS

2, 4, or 6

LAMP WATTAGE/TYPE

28T5S	4', 28 watt T5
54T5H	4', 54 watt T5HO

OPTIONS

FWSBL2	Frame & louver, white, straight blade, 1" deep, 2 lamp, 2 x 17 cell
FWSBL4	Frame & louver, white, straight blade, 1" deep, 4 lamp, 4 x 17 cell
FWSBL6	Frame & louver, white, straight blade, 1" deep, 6 lamp, 6 x 17 cell

OPTIONS cont'd.

S7238/W	Cord, 72" length, No. 18 AWG, 3 conductor, white
HUB 3/4"	Cast iron hub & junction box for single pendant mount
FCHA118	Clear acrylic lens, .118" thick, high temperature
Y	1 pair "Y" hangers for chain or aircraft cable
UP2	2 rows of uplight apertures, 4-lamp or 6-lamp fixtures only
UP4	4 rows of uplight apertures, 6-lamp fixture only
REFL WHITE	White reflector
6CPI/L5-15P/TWLK	6' cord & NEMA Twistlock 120V plug
6CPI/L7-15P/TWLK	6' cord & NEMA Twistlock 277V plug

BALLAST TYPE

EB4	4 lamp electronic ballast

Consult factory for complete ballast offering

VOLTAGE

120	120V
208	208V (T5H only)
240	240V (T5H only)
277	277V
UNV	120 - 277V
347	347V
480	480V (T5H only)
HRV	347 - 480V (T5H only)

Note: For more options/accessories, ballast combinations, and product details, please consult factory

GLA T5 SERIES PHOTOMETRY INFO

NAOMI MILLER
LIGHTING DESIGN

Fixture Type: Q6

Williams Catalog #GLA-4-454T5H-WSBL4-EB2/2
Test Report #19713.0, Dated 01/28/05

CANDLEPOWER DISTRIBUTION

VERT. ANG.	HORIZONTAL ANGLE 0	45	90	ZONAL LUMENS
0	8840.	8840.	8840.	
5	8775.	8719.	8671.	836.0
15	8164.	7996.	7695.	2212.0
25	7193.	6233.	5074.	2831.0
35	5952.	4014.	2650.	2620.0
45	4489.	2192.	2303.	2230.0
55	2947.	1705.	2196.	1869.0
65	1524.	1304.	1240.	1291.0
75	569.	571.	565.	598.0
85	139.	168.	178.	185.0
90	0.	30.	47.	

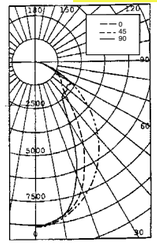

LUMEN SUMMARY

ZONE	LUMENS	% LAMP	% FIXTURE
0 - 30	5879.	32.7	40.1
0 - 40	8498.	47.2	57.9
0 - 60	12598.	70.0	85.9
0 - 90	14671.	81.5	100.0
40 - 90	6172.	34.3	42.1
60 - 90	2073.	11.5	14.1
90 - 180	0.	0.0	0.0
0 - 180	14671.	81.5	100.0

TOTAL LUMINAIRE
OPTICAL **EFFICIENCY** = **81.5%**
SPACING CRITERIA: END = 1.2 DIAG. = 1.0 ACROSS = 0.9

ZONAL CAVITY COEFFICIENTS

EFFECTIVE FLOOR CAVITY REFL. = .20

CEILING	.80			.70			.50		
WALL RCR	.70	.50	.30	.70	.50	.30	.50	.30	.10
0	.97	.97	.97	.95	.95	.95	.91	.91	.91
1	.90	.87	.84	.88	.86	.83	.82	.80	.78
2	.84	.78	.74	.82	.77	.73	.74	.71	.67
3	.78	.71	.65	.76	.69	.64	.67	.63	.59
4	.72	.64	.58	.71	.63	.57	.61	.56	.52
5	.67	.58	.51	.65	.57	.51	.55	.50	.46
6	.62	.53	.46	.61	.52	.46	.50	.45	.41
7	.58	.48	.42	.57	.47	.41	.46	.41	.37
8	.54	.44	.37	.53	.43	.37	.42	.37	.33
9	.50	.40	.34	.49	.39	.33	.38	.33	.29
10	.47	.37	.30	.46	.36	.30	.35	.30	.26

Williams Catalog #GLA-4-454T5H-EB2/2
Test Report #19712.0, Dated 01/28/05

Lamp Type: FP54T5HO/835
Lamp Quantity: 4

CANDLEPOWER DISTRIBUTION

VERT. ANG.	HORIZONTAL ANGLE 0	45	90	ZONAL LUMENS
0	8602.	8602.	8602.	
5	8575.	8577.	8565.	825.0
15	8247.	8098.	7746.	2245.0
25	7601.	6667.	5349.	3011.0
35	6656.	4530.	3921.	3137.0
45	5457.	3222.	3092.	2910.0
55	4044.	2342.	1860.	2240.0
65	2483.	1252.	1410.	1529.0
75	1036.	691.	424.	696.0
85	87.	37.	56.	91.0
90	0.	0.	0.	

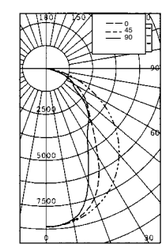

LUMEN SUMMARY

ZONE	LUMENS	% LAMP	% FIXTURE
0 - 30	6080.	33.8	36.5
0 - 40	9218.	51.2	55.3
0 - 60	14368.	79.8	86.1
0 - 90	16684.	92.7	100.0
40 - 90	7466.	41.5	44.8
60 - 90	2316.	12.9	13.9
90 - 180	0.	0.0	0.0
0 - 180	16684.	92.7	100.0

ZONAL CAVITY COEFFICIENTS

EFFECTIVE FLOOR CAVITY REFL. = .20

CEILING	.80			.70			.50		
WALL RCR	.70	.50	.30	.70	.50	.30	.50	.30	.10
0	113	113	113	108	108	108	1.03	1.03	1.03
1	1.05	1.01	.98	101	.97	.94	.93	.91	.89
2	.97	.91	.85	.93	.87	.82	.84	.80	.77
3	.90	.81	.74	.86	.78	.73	.76	.71	.67
4	.83	.73	.66	.80	.71	.65	.69	.63	.59
5	.77	.66	.58	.73	.64	.57	.62	.56	.51
6	.72	.60	.52	.68	.58	.51	.56	.50	.45
7	.66	.54	.46	.63	.53	.46	.51	.45	.40
8	.61	.49	.41	.59	.47	.41	.46	.40	.36
9	.57	.45	.37	.54	.43	.36	.42	.36	.31
10	.53	.41	.33	.51	.39	.33	.39	.32	.28

TOTAL LUMINAIRE
OPTICAL **EFFICIENCY** = **92.7%**
SPACING CRITERIA: END = 1.2 DIAG. = 1.0 ACROSS = 0.9

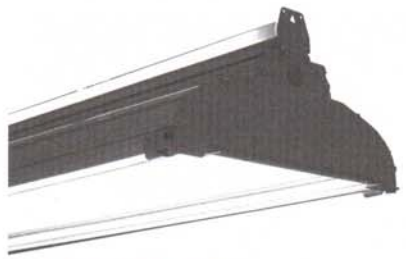

RAPTOR™
SERIES PATENT PENDING

FEATURES:

A small profile T5 high-output fluorescent commercial/ industrial luminaire robustly designed for maximum performance with minimum energy use in highbay application. With a near tool-less design the RAPTOR™ is ready to install right out of the box - even the lamps come pre-installed. Multi-volt ballasts take the guesswork out of what to stock. Rated at 93 L/W (54 watt lamp), this product offers outstanding savings on installation and maintenance labor costs.
UL/CUL damp location listed.

HOUSING:

Three-piece extruded aluminum housing with integral ballast heat-sink. Reflectors easily removed for access to ballast/wiring compartment. 16 gauge aluminum end plates. 1/2" wiring hole in each endplate with closure plug. Clear anodized standard finish, anodized colors available.

ELECTRICAL:

Ballasts are CBM certified HPF electronic programmed start, 0.99 power factor, <10% THD, UL/CSA listed, Type 1, Class P, 105V-305V, 50/60 Hz. Lampholders are positive-lock, captive rotor type, UL listed. Lamps are 85 CRI with 0.95 lumen maintenance over life.

OPTICS:

95% reflective specular hard-anodized aluminum roll-formed engineered reflector. Optional 0.125" clear acrylic lens in hinged, tool-less anodized aluminum door frame. Optional dedicated uplight lamp with identical reflector attributes and snap-on linear-prismed acrylic lens.

MOUNTING:

Fixture provided with endplate mounting tabs that will accept chain hooks. Other mounting options available.

FIXTURE WEIGHT:
15 lbs. 5 oz.

SHIPPING:

Shipped assembled & pre-lamped if so ordered.

WARRANTY: The Light Edge, Inc. warrants the Raptor™ to be free from defects in material and workmanship for five years from date of purchase, exclusive of lamps, ballasts, and optional electrical devices.

09/07 RAP6
Printed on Recycled Stock

RAP6™
RAPTOR™ T5/HO HIGH

NAOMI MILLER
LIGHTING DESIGN

Fixture Type: Q6-Alt

Available with optional Dedicated Up-Light Lamp

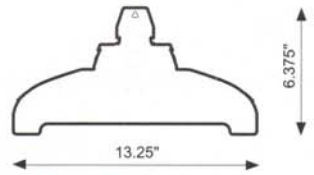

Dimensions 47.75" Long X 6.375" High X 13.25" Wide

ORDERING NUMBER:

HOUSING		LAMP				
RAP6	4	54	35	MV	XX	
MODEL	LENGTH	WATTS	COLOR TEMP.	BALLAST	OPTION	

MODEL
RAP6 = RAPTOR™ 6 LAMP PROFILE

LENGTH
4 = 4 FEET NOMINAL (6 LAMPS TOTAL)
8 = 8 FEET NOMINAL (12 LAMPS TOTAL)

LAMP WATTAGE
54 = 4' (NOM) 54W HIGH OUTPUT (5,000 LUMENS)

LAMP COLOR TEMPERATURE
30 = 3,000 K
35 = 3,500 K
41 = 4,100 K
50 = 5,000 K
65 = 6,500 K
XX = NO LAMPS

BALLAST
MV = MULTI-VOLTAGE (105V THROUGH 305V, 50/60 Hz)
D3 = DEDICATED 347 V
(Consult 'Options' tab for other ballast choices)

OPTIONS:
XX = NO OPTIONS

LENSING
LA = 0.125" CLEAR ACRYLIC LENS IN EXTRUDED ALUMINUM DOOR FRAME
LP = 0.125" CLEAR POLYCARBONATE LENS IN EXTR. ALUM. DOOR FRAME
(consult 'Options' tab for other lensing)
WGK = WIREGUARD IN EXTRUDED ALUMINUM DOOR FRAME
WGA = WIREGUARD & ACRYLIC LENS IN EXTR. ALUMINUM DOOR FRAME
WGP = WIREGUARD & POLYCARBONATE LENS IN EXTR. ALUM. DOOR FRAME

CORD and PLUG
CS = 6'0" BLACK 16/3 CORDSET WITH STRAIN RELIEF
CP* = CORD PLUG (SEE 'OPTIONS' TAB FOR CODE)

UP-LIGHT
UP = DEDICATED UP-LIGHT LAMP CHAMBER
(with linear-prismed snap-on lens)

FINISH
(Clear Anodized Standard)
** = CUSTOM COLOR (SEE 'OPTIONS' TAB FOR CODE)

The Light Edge, Inc.
www.thelightedge.com - Oregon, USA - 503-968-9968

LIGHT EDGE™ RAPTOR™
PHO
IE

NAOMI MILLER
LIGHTING DESIGN

Fixture Type: Q6-Alt

PHOTOMETRIC TEST REPORT

REPORT NUMBER: ITL53499
CATALOG NO.: RAP6-4-54-35-MV-XX
TOTAL INPUT WATTS: 330.0
FIXTURE EFFICIENCY 81.2% (4,400 LUMENS PER LAMP)

CANDELA DISTRIBUTION

	0.0	22.5	45.0	67.5	90.0
0	6442	6442	6442	6442	6442
5	6450	6517	6685	6787	6843
15	6183	6654	6984	7230	7307
25	5684	6411	6914	7047	7096
35	4974	5927	6253	6408	6569
45	4089	5059	5428	5765	5698
55	3077	3931	4325	3755	3527
65	1995	2842	2283	2635	2817
75	941	1187	1767	2090	2108
85	126	425	422	460	422
90	0	14	14	4	0

COEFFICIENTS OF UTILIZATION ZONAL CAVITY METHOD

RF	20				20				20				20				20				20
RC	80				70				50				30				10				0
RW	70	50	30	10	70	50	30	10	50	30	10		50	30	10		50	30	10		0
0	86	86	86	86	84	84	84	84	81	81	81		77	77	77		74	74	74		72
1	79	75	72	69	77	73	70	68	70	68	66		67	65	64		65	63	62		60
2	71	65	60	56	69	64	59	55	61	57	54		59	56	53		57	54	51		50
3	65	57	51	46	63	56	50	46	54	49	45		52	48	44		50	46	43		42
4	59	51	44	39	58	50	43	39	48	42	38		46	41	38		44	40	37		36
5	55	45	38	34	53	44	38	33	43	37	33		41	36	33		40	36	32		31
6	50	41	34	29	49	40	34	29	38	33	29		37	32	29		36	32	28		27
7	47	37	30	26	45	36	30	26	35	29	25		34	29	25		33	28	25		24
8	43	33	27	23	42	33	27	23	32	27	23		31	26	22		30	26	22		21
9	40	31	25	21	39	30	24	20	29	24	20		29	24	20		28	23	20		19
10	38	28	22	19	37	28	22	18	27	22	18		26	22	18		26	21	18		17

LUMINANCE DATA (CD/SQ. M)

	0-DEG	45-DEG	90-DEG
45	14491.	19237.	20194.
55	13445.	18898.	15411.
65	11830.	13538.	16704.
75	9113.	17112.	20414.
85	3622	12131.	12131.

ZONAL LUMEN SUMMARY
@ 5,000 LUMENS PER LAMP

ZONE	LUM.	%LAMP	%FIXT
0 - 30	5678	18.9	26.1
0 - 40	9496	31.7	43.7
0 - 60	16993	56.6	78.2
0 - 90	21743	72.5	100.0
90 - 180	0.0	0.0	0.0
0 - 180	21743	72.5	100.0

PHOTOMETRIC DISTRIBUTION CURVE

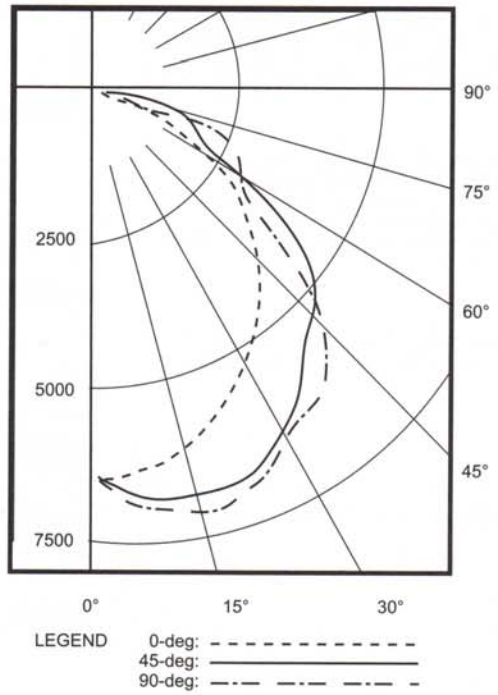

09/07 RAP6-PH
Printed on Recycled Stock

The Light Edge, Inc.
www.thelightedge.com - Oregon, USA - 503-968-9968

NAOMI MILLER
LIGHTING DESIGN

Fixture Type: S1, S2

Drawn — **03-NOV-06 ML**
Revised — **26-JUN-07 ML**

SLF2520

CONSTRUCTION

A Housing - Made entirely of heavy gauge aluminium, composed of a mai
welded to a wall case. This case mounts to a wall support and wedges a
EPDM gasket against the wall, ensuring sealing of the luminaire and pre
from infiltrating.

B Wall support - Made of a galvanized steel plate of heavy gauge, in a hooked shape. This support is fixed to the wall using bolts and is used as a support for the ballast.

C Lens frame - Made of moulded 356 aluminium alloy. Access to the lamp is made quickly via two screws. A high-strength gasket of silicone ensures sealing of the luminaire and prevents dust from infiltrating.

OPTICS

D Lens - Made of clear, micro-prismatic and heat resistant tempered glass.

E Baffle - Made of extruded aluminum.

ELECTRICAL COMPONENTS

F Electronic ballast - Easily accessible, the ballast is mounted on a removable heavy gauge galvanized steel tray, is equipped with a quick disconnect wiring system and is factory pre wired and tested. It has a high power-factor and is of high frequency electronic type. All electrical components are CSA and UL approved. One ballast for each lamp.

G Socket - Made of porcelain, medium base and 4KV pulse rated (lamp not included). Lamp type: PAR-30L, 20W.

FINISH

- All surfaces are chemically treated against corrosion through a multi-stage immersion process. The polyester powder finish is applied by a thermostatic process offering an excellent protection conforming to ASTM G7, D-2247 and B-117/D-1654 standards. Standard colours are black, bronze and white with a textured finish. Consult SDL's "Colour Selection Guide" for others.

HARDWARE

- All exterior hardware is made of stainless steel.

WARRANTY

- This product has a one year warranty on the finish and against any manufacturing defect. The ballast and its components are covered by the manufacturer's warranty.

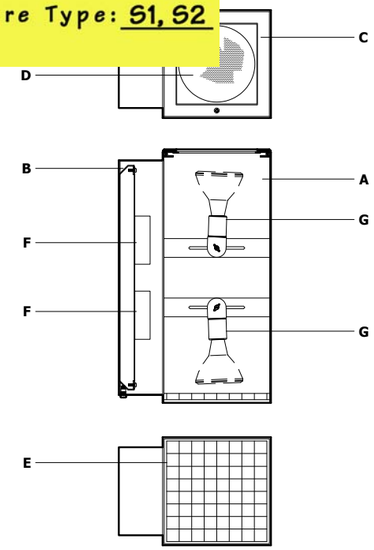

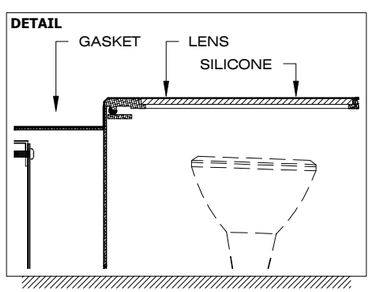

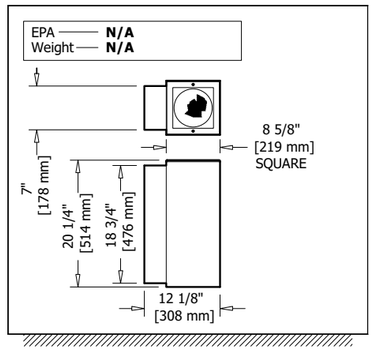

Type	Quantity	Model	Distribution	Wattage	Voltage	Colour	Other components
		–	–	–	–	–	

Submitted on _____ for ☐ **Information** ☐ **Approval**

Socket — ☐ **Medium** ☐ **Mogul** ☐ _____

Other(s) —

Project — _____

Distributor — _____

Your order # — _____

Representative — _____

Our order # — _____

440 ave. des Laurentides, suite 101, Beauport (Québec) G1C 5C4 (Canada) - Tel.: (418) 664-0999 - Fax: (418) 664-0816 - Internet: sdllighting.com

NAOMI MILLER
LIGHTING DESIGN

Fixture Type: S1, S2

SLF2520

- Assembly detail(s) -

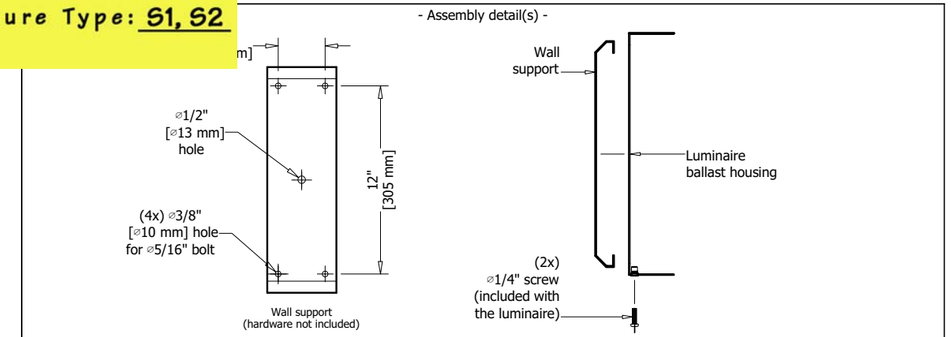

- Specification guide -

Distribution	Wattage	Voltage	Colour	Other components
Up and down — **UAD** ☐	MH **20B** ● ☐ — Medium socket only	**120** ☐ **208** ☐ **240** ☐ **277** ☐	Standard Colours: Textured black — **A11** ☐; Textured bronze — **B11** ☐; Textured white — **C11** ☐	

Special Colours

Textured beige	**D11** ☐
Silver	**E10** ☐
Silver charcoal	**E20** ☐
Textured grey blue	**G11** ☐
Textured blue	**H11** ☐
Textured dark blue	**H21** ☐
Textured dark turquoise	**J11** ☐
Textured turquoise	**J21** ☐
Textured forest green	**K11** ☐
Textured dark forest green	**K21** ☐
Textured dark green	**K31** ☐
Fine textured dark green	**K42** ☐
Textured red	**M11** ☐
Textured burgundy	**M21** ☐
Fine textured patina	**X11** ☐
Custom colour	**CC** ★ ☐

● Use PAR-30L bulb type
★ Consult manufacturer

IMPORTANT NOTICE
Éclairage SDL inc. disclaims any responsability for problems that could occur from a combination of third party products with those of Éclairage SDL inc.

Order example — **SLF2520** (Model) - **UAD** (Distribution) - **39B** (Wattage) - **120** (Voltage) - **A11** (Colour) - (Other components)

440 ave. des Laurentides, suite 101, Beauport (Québec) G1C 5C4 (Canada) - Tel.: (418) 664-0999 - Fax: (418) 664-0816 - Internet: sdllighting.com

Éclairage SDL inc. reserves the right to modify the characteristics of its products without prior notification. Éclairage SDL inc. is not responsible for the choice of the lamps.
Éclairage SDL inc. will only commence production upon receiving this drawing approved. Annotations to the approved drawing may change pricing and delay.

Notes:

NAOMI MILLER
LIGHTING DESIGN

Fixture Type: _____
S9, S10, S11

100 LINE

106 QUARTER SPHERE SCONCE

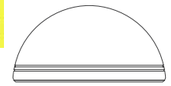

GENERAL DESCRIPTION: The Gardco 106 Quarter Sphere high performance sconces offer an excellent alternative to unsightly wall mounted fixtures. These architecturally refined luminaires are designed to integrate naturally to wall surfaces. The 106 luminaires are available with three (3) different distribution patterns - a wide throw, a medium throw and a forward throw. Each luminaire is designed to accept HID sources up to 175MH, and Compact Fluorescent sources up to 42 watt. Housings are sealed throughout, completely excluding moisture, dust, insects and contaminants.

CUTOFF PERFORMANCE: 106 luminaires installed in the normal downlight position, with a flat glass lens, provide full cutoff performance.

ORDER

PREFIX	DISTRIBUTION	WATTAGE	VOLTAGE	FINISH	OPTIONS

Enter the order code into the appropriate box above. Note: Gardco reserves the right to refuse a configuration. Not all combinations and configurations are valid. Refer to notes below for exclusions and limitations. For questions or concerns, please consult the factory.

PREFIX

106 Quarter Sphere
106EM Emergency Sconce
106EMR Remote Emergency Sconce
Refer to confiiguration Chart below for available combinations.

DISTRIBUTION

FT Forward Throw *N/A w/Fluorescent Lamps.*
WT Wide Throw *N/A w/Fluorescent Lamps.*
MT Medium Throw

WATTAGE AND VOLTAGE

LAMP / VOLTAGE CHART - 106

	Voltage					
E17 - HID	120	208	240	277	347	480
50MH	●			●		
70MH	●	●	●	●	●	
100MH	●	●	●	●	●	●
150MH	●	●	●	●	●	
175MH	●	●	●	●	●	●
50CMHE[1]	UNIV					
70CMHE[1]	UNIV					
100CMHE[1]	UNIV					
35HPS	●					
50HPS	●			●		
70HPS	●	●	●	●	●	●
100HPS	●	●	●	●	●	●
150HPS	●	●	●	●	●	
Fluorescent						
26QF[1]	UNIV				●	
226QF[1]	UNIV				●	
32TRF[1]	UNIV				●	
42TRF[1]	UNIV				●	

CONFIGURATION CHART - 106EM

	Distribution			Voltage					
Fluorescent	FT	WT	MT	120	208	240	277	347	480
226QF[2]			●	●			●		
32TRF			●	●			●		
42TRF			●	●			●		

CONFIGURATION CHART - 106EMR

	Distribution			Voltage					
Fluorescent	FT	WT	MT	120	208	240	277	347	480
226QF[2]			●	●			●		
32TRF			●	●			●		
42TRF			●	●			●		

Combinations marked with a dot or shown with "UNIV" are available for ordering.
MH - Metal Halide CMHE - Ceramic Metal Halide with Electronic Ballast
HPS - High Pressure Sodium QF - Quad Fluorescent
TRF - Triple Tube Fluorescent

1. Fluorescent and CMHE luminaires feature electronic ballasts that accept 120V through 277V, 50hz to 60hz, input. Specify "UNIV" voltage for 120V through 277V.
2. One (1) lamp is powered in emergency mode.

FINISH

BRP Bronze Paint
BLP Black Paint
WP White Paint
NP Natural Aluminum Paint
BGP Beige Paint
OC Optional Color Paint
Specify Optional Color or RAL ex: OC-LGP or OC-RAL7024.
SC Special Color Paint
Specify. Must supply color chip.

OPTIONS

F Fusing *120V through 277V only.*
PCB Button Type Photocontrol *n/a w/480V.*
QS[3] Quartz Standby
QST[3] Quartz Standby - Timed Delay
3. HID only, N/A with CMHE Ballasts, FT Optics or in 480V. 100w Quartz max.
Q924[4] Quartz Emergency
Q12V[4] Quartz 12V Emergency
4. WT Optic only. 150w HID maximum. 100w Quartz maximum.
SL Solite® Diffusing Lens
UT 5° Uptilt
WS Wall Mounted Box for Surface Conduit *Rear entry permitted.*
WS/UT WS Option w/5° Uptilt *Rear entry permitted.*
WG Wire Guard

EMR Luminaires Only:
B84CG Bodine Emergency Battery Pack
Emergency Battery Packs for EMR types MUST be ordered with luminaires and supplied by Gardco.

A Genlyte Company

Gardco Lighting
1611 Clovis Barker Road
San Marcos, TX 78666

(800) 227-0758
(512) 753-1000
FAX: (512) 753-7855
www.sitelighting.com

GARDCO LIGHTING

79115-104/0907

100 LINE

106 QUARTER SPHERE SCONCE

NAOMI MILLER
LIGHTING DESIGN

Fixture Type: _____
S9, S10, S11

SPECIFICATIONS

GENERAL: Each Gardco 106 luminaire is a wall mounted cutoff luminaire for high intensity discharge or compact fluorescent lamps. Internal components are totally enclosed in a rain-tight, dust-tight and corrosion resistant housing. The housing, back plate and door frame are die cast aluminum. A choice of three (3) optical systems is available. Luminaires are suitable for wet locations (damp locations if inverted).

HOUSING: Single-piece quarter-sphere housings are die cast aluminum. A memory retentive gasket seals the housing with the doorframe to exclude moisture, dust, insects and pollutants from the optical system. A black, die cast ribbed backplate dissipates heat for longer lamp and ballast life.

DOOR FRAME: A single-piece die cast aluminum door frame integrates to the housing form. The door frame is hinged closed and secured to the housing with two (2) captive stainless steel fasteners. The heat and impact resistant 1/8 (.32cm) tempered glass lens and one-piece gasket are mechanically secured to the door frame with four (4) galvanized steel retainers.

OPTICAL SYSTEMS: Reflectors are composed of specular extruded and faceted components, electropolished, anodized and sealed. Reflector segments are set in arc tube image duplicating patterns to achieve the wide throw, forward throw or medium throw downlight distributions.

ELECTRICAL: **Standard Luminaires:** Each high power factor HID core and coil ballast is the separate component type, capable of providing reliable lamp starting down to -20°F/-29°C. Component-to-component wiring within the luminaire will carry no more than 80% of rated current and is listed by UL for use at 600 VAC at 302°F/150°C or higher. Plug disconnects are listed by UL for use at 600 VAC, 15A or higher.

Standard fluorescent units have a starting temperature of 0°F/-18°C. Standard fluorescent ballasts are high power factor electronic solid state.

EM Luminaires: In the event of power interruption, integral battery pack will power (1) 42W, (1) 32W or (1) 26W compact fluorescent lamp at reduced light levels for a minimum of 90 minutes. Maintenance free battery is rated for ambient temperatures down to 32°F/0°C (EM). Indicator light is visible through the lens. A test switch is accessible through the door assembly. EM units do not bear CUL label.

EMR Luminaires: A 7.5'/2.29m, 12 wire, quick disconnect assembly is provided for wiring through conduit (by others) to a Bodine B84CG fluorescent emergency battery pack. The fluorescent emergency battery pack MUST be supplied by Gardco. The B84CG option is required to be on the order to the factory.

In the event of power interruption, the B84CG remote battery pack will power (1) 42W, (1) 32W or (1) 26W compact fluorescent lamp at reduced light levels for a minimum of 90 minutes. Maintenance free battery is rated for ambient temperatures down to 32°F/0°C. Minimum luminaire starting temperature is 0°F/-18°C. Indicator light is visible through the lens. A test switch is accessible through the door assembly. NOTE: B84CG does not bear CUL label.

LAMPHOLDER: Pulse rated medium base sockets are glazed porcelain with nickel plated screw shell. Fluorescent sockets are high temperature (PBT) with brass contacts.

FINISH: Each standard color luminaire receives a fade and abrasion resistant, electrostatically applied, thermally cured, triglycidal isocyanurate (TGIC) textured polyester powdercoat finish. Standard colors include bronze (BRP), black (BLP), white (WP), natural aluminum (NP) and beige (BGP). Consult factory for specs on custom colors.

LABELS: All luminaires bear UL or CUL (where applicable) labels, except as noted. Lens down application is Wet Location and lens up is Damp Location, except when using the optional inverted Wet Location components.

FULL CUTOFF PERFORMANCE: Full cutoff performance means a luminaire distribution where zero candela intensity occurs at an angle of 90° above nadir. Additionally, the candela per 1000 lamp lumens does not numerically exceed 100 (10 percent) at a vertical angle of 80° above nadir. This applies to all lateral angles around the luminaire.

CUTOFF PERFORMANCE: Cutoff performance means a luminaire distribution where the candela per 1000 lamp lumens does not numerically exceed 25 (2.5 percent) at an angle at or above 90° above nadir, and 100 (10 percent) at a vertical angle of 80° above nadir. This applies to all lateral angles around the luminaire.

DIMENSIONS

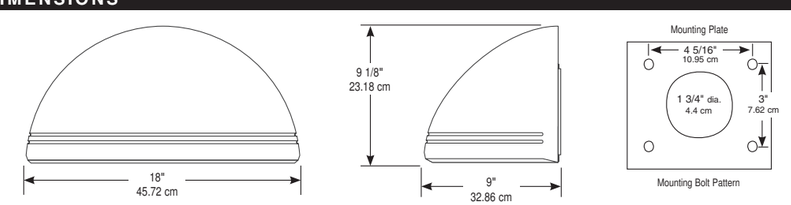

Note: Mounting plate center is located in the center of the luminaire width and 3.5"(8.89cm) above the luminaire bottom (lens down position). Splices must be made in the J-box (by others). Mounting plate must be secured by max. 5/16" (.79cm) diameter bolts (by others) structurally to the wall.

Gardco Lighting reserves the right to change materials or modify the design of its product without notification as part of the company's continuing product improvement program. Solite® is a Registered Trademark of AFG Industries

© Copyright Gardco Lighting 2001-2007. All Rights Reserved. International Copyright Secured.

A Genlyte Company

Gardco Lighting
1611 Clovis Barker Road
San Marcos, TX 78666

(800) 227-0758
(512) 753-1000
FAX: (512) 753-7855
www.sitelighting.com

GARDCO LIGHTING

79115-104/0907

NAOMI MILLER
LIGHTING DESIGN
MR-16
Fixture Type: Trackhead

ProSpec™ Track Lighting 26016

Low Voltage Cylinder MR16

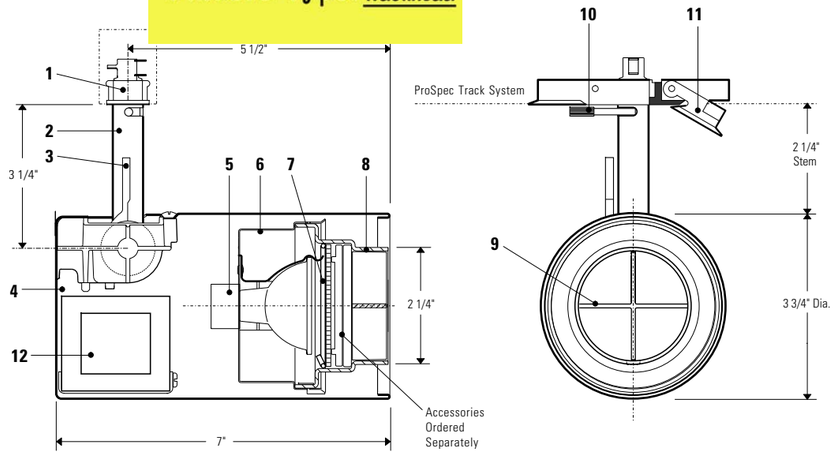

Fixture MOL = 9 1/2"

Ordering Information

Catalog No.	Finishes	Mountings	Lamps
26016MBWH	Matte White	ProSpec™ Track System	MR16 50W Max.
26016MBBK	Matte Black		

Features

1. **Track attachment fitting:** die-cast aluminum with separate mechanical and electrical functions. Fitting cannot be engaged or disengaged while fixture is powered. Polarity is not a concern with ProSpec track because of its symmetrical positioning of circuits within the track, adapters are reversed to access one or the other circuits.
2. **Stem:** 5/8" O.D. .048" wall, stainless steel.
3. **Locking feature:** die-cast aluminum mechanism permits the locking of the horizontal and vertical positions simultaneously by clamping jaws. When the stainless steel braking lever is released, the horizontal and vertical functions remain fully tensioned to hold aiming positions. Adjustment range is: horizontal 0-340°; vertical 0° (NADIR) -90°.
4. **Housing:** 20ga. (.036") steel, hemmed front edge for stiffness, prevents chipping and enhances appearance.
5. **Lampholder:** Steatite for GX/GY 5.3 Bi-Pin lamps. 250° C Teflon® leads.
6. **Lamp and accessory support:** .032 steel, flared for easy entry of cartridge; matte black finish.
7. **Lens retaining ring:** .093" spring steel rod.
8. **Accessory cartridge:** Formed aluminum, installs and removes with a twist and lock action. Holds three accessories max. and cross blade baffle.
9. **Cross blade baffle:** .070" extruded aluminum.
10. **Lever:** energizes fixture electrically by 90° rotation.
11. **Clamping tabs:** expands or releases gripper springs from track ledge; gripper springs hold attachment fitting securely within track.
12. **Transformer:** 50W magnetic transformer, 120V Primary, 11.5V Secondary.

Finish

All painted finishes are powder coated baked enamel.

Options & Accessories

Accessories: 2 1/2" dia. series. Filters, lenses, screens and louvers.

Electrical

Electrical components: Polycarbonate moldings.
Contacts: Heavy gauge 1/2 hard brass developed for Lightolier's "U" shaped track conductors.

Dimming

Dimming controls: use only dimmers specifically designed for use with magnetic transformers, like Lightolier Onset®, Sunrise® series LV or VA dimmers, or any Lightolier Controls dimming system. Low voltage fixtures may produce audible sound when used with dimmers, which may be objectionable in acoustically critical areas.

Labels

UL; I.B.E.W.

Teflon® is a registered trademark of E.I. DuPont.

Job Information **Type:**

Job Name:

Cat. No.:

Lamp(s):

Notes:

Lightolier a Genlyte Thomas Company www.lightolier.com
631 Airport Road, Fall River, MA 02720 • (508) 679-8131 • Fax (508) 674-4710

LIGHTOLIER®

NAOMI MILLER
LIGHTOLIER DESIGN
MR-16
Fixture Type: Trackhead

ProSpec™ Track Lighting 26016

Low Voltage Cylinder MR16

Lighting Data

Aiming Angle:

L Beam length
W Beam width
C Distance to center of beam
D Distance
A Aiming angle
FC Footcandles

L and **W** are the outer points where the candlepower drops to 50% of the maximum. **FC** are the initial footcandles at the center of the beam.

0°

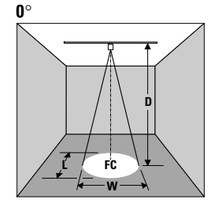

30° 45° or 60° Horizontal

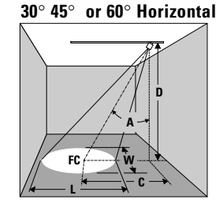

30° 45° or 60° Vertical

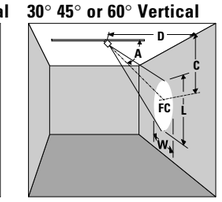

LAMP

Lamp	Beam Spread 50% Max CP	Beam Center C.P. Candelas	Rated Life-Hrs	0° AIMING ANGLE D	FC	L	W	A=30° AIMING ANGLE D	C	FC	L	W	A=45° AIMING ANGLE D	C	FC	L	W	A=60° AIMING ANGLE D	C	FC	L	W
20W MR16 (T-H) VNSP (EZX)	7°	8200	3000	7'	187	0.9'	0.9'	6'	3.5'	148	1.0'	0.8'	4'	4.0'	181	1.0'	0.7'	2'	3.5'	256	1.0'	0.5'
				10'	82	1.2'	1.2'	9'	5.2'	66	1.5'	1.3'	6'	6.0'	81	1.5'	1.0'	3'	5.2'	114	1.5	0.7'
				13'	49	1.6'	1.6'	12'	6.9'	37	2.0'	1.7'	8'	8.0'	45	2.0'	1.4'	4'	6.9'	64	2.0'	1.0'
				16'	32	2.0'	2.0'	15'	8.7'	24	2.4'	2.1'	10'	10.0'	29	2.5'	1.7'	5'	8.7'	41	2.5'	1.2'
20W MR16 (T-H) NSP (ESX)	13°	3600	2000	6'	100	1.4'	1.4'	5'	2.8'	94	1.5'	1.3'	3'	3.0'	141	1.4'	1.0'	2'	3.5'	113	1.9'	0.9'
				8'	58	1.8'	1.8'	7'	4.0'	48	2.1'	1.8'	5'	5.0'	51	2.3'	1.6'	3'	5.2'	50	2.8'	1.4'
				10'	38	2.3'	2.3'	9'	5.2'	29	2.7'	2.4'	7'	7.0'	28	3.2'	2.3'	4'	6.9'	28	3.8'	1.8'
				12'	25	2.7'	2.7'	11'	6.4'	19	3.4'	2.9'	9'	9.0'	18	4.2'	2.9'	5'	8.7'	18	4.7'	2.3'
20W MR16 (T-H) FL (BAB)	40°	525	4000	2'	131	1.5'	1.5'	2'	1.2'	85	2.0'	1.7'	2'	2.0'	45	3.4'	2.1'	1'	1.7'	56	4.8'	1.5'
				3'	58	2.2'	2.2'	3'	1.7'	38	3.0'	2.5'	3'	3.0'	21	5.0'	3.1'	2'	3.5	16	9.7'	2.9'
				4'	33	2.9'	2.9'	4'	2.3'	21	4.1'	3.4'	4'	4.0'	12	6.7'	4.1'	3'	5.2'	7	14.5'	4.4'
				5'	21	3.6'	3.6'	5'	2.9'	14	5.1'	4.2'	5'	5.0'	7	8.4'	5.1'	4'	6.9'	4	19.3'	5.8'
35W MR16 (T-H) NSP (FRB)	12°	8700	4000	7'	178	1.5'	1.5'	6'	3.5'	157	1.7'	1.5'	4'	4.0'	192	1.7'	1.2'	2'	3.5'	272	1.7'	0.8'
				10'	87	2.1'	2.1'	9'	5.2'	70	2.5'	2.2'	6'	6.0'	85	2.6'	1.8'	3'	5.2'	121	2.6'	1.3'
				13'	51	2.7'	2.7'	12'	6.9'	39	3.4'	2.9'	8'	8.0'	48	3.4'	2.4'	4'	6.9'	68	3.5'	1.7'
				16'	34	3.4'	3.4'	15'	8.7'	25	4.2'	3.6'	10'	10.0'	31	4.3'	3.0'	5'	8.7'	44	4.3'	2.1'
35W MR16 (T-H) SP (FRA)	20°	3900	4000	6'	108	2.1'	2.1'	5'	2.9'	101	2.4'	2.0'	3'	3.0'	153	2.2'	1.5'	2'	3.5'	122	3.1'	1.4'
				8'	61	2.8'	2.8'	7'	4.0'	52	3.3'	2.9'	5'	5.0'	55	3.6'	2.5'	3'	5.2'	54	4.7'	2.1'
				10'	39	3.5'	3.5'	19'	5.2'	31	4.3'	3.7'	7'	7.0'	28	5.1'	3.5'	4'	6.9'	30	6.2'	2.8'
				12'	27	4.2'	4.2'	111'	6.4'	21	5.2'	4.5'	9'	9.0'	17	4.5'	4.5'	5'	8.7'	20	7.8'	3.5'
42W MR16 (T-H) VNSP (EZY)	9°	13100	3500	8'	205	1.3'	1.3'	7'	4.0'	174	1.5'	1.3'	5'	5.0'	185	1.6'	1.1'	3'	5.2'	182	1.9'	0.9'
				12'	91	1.9'	1.9'	10'	5.8'	85	2.1'	1.8'	7'	7.0'	95	2.2'	1.6'	4'	6.9'	102	2.6'	1.3'
				16'	51	2.5'	2.5'	13'	7.5'	50	2.7'	2.4'	9'	9.0'	57	2.9'	2.0'	5'	8.7'	66	3.2'	1.6'
				20'	33	3.1'	3.1'	16'	9.2'	33	3.4'	2.9'	11'	11.0'	38	3.5'	2.4'	6'	10.4'	45	3.8'	1.9'
50W MR16 (T-H) NFL (EXZ)	27°	3400	4000	6'	94	2.9'	2.9'	5'	2.9'	88	3.3'	2.8'	3'	3.0'	134	3.1'	2.0'	2'	3.5'	106	4.6'	1.9'
				8'	53	3.8'	3.8'	7'	4.0'	45	4.6'	3.9'	5'	5.0'	48	5.1'	3.4'	3'	5.2'	47	7.0'	2.9'
				10'	34	4.8'	4.8'	9'	5.2'	27	5.9'	5.0'	7'	7.0'	25	7.1'	4.8'	4'	6.9'	27	9.3'	3.8'
				12'	24	5.8'	5.8'	11'	6.4'	18	7.2'	6.1'	9'	9.0'	15	9.2'	6.1'	5'	8.7'	17	11.6'	4.8'
50W MR16 (T-H) NSP (EXN)	40°	1850	4000	4'	116	2.9'	2.9'	3'	1.7'	134	3.0'	2.5'	3'	3.0'	73	5.0'	3.1'	1'	1.7'	231	4.8'	1.5'
				6'	51	4.4'	4.4'	5'	2.9'	48	5.1'	4.2'	4'	4.0'	41	6.7'	4.1'	2'	3.5'	58	9.7'	2.9'
				8'	29	5.8'	5.8'	7'	4.0'	25	7.4'	5.9'	5'	5.0'	26	8.4'	5.1'	3'	5.2'	26	14.5'	4.4'
				10'	19	7.3'	7.3'	9'	5.2'	15	9.1'	7.6'	6'	6.0'	18	10.1'	6.2'	4'	6.9'	14	19.3'	5.8'
50W MR16 (T-H) WFL (FNV)	55°	1150	4000	3'	128	3.1'	3.1'	3'	1.7'	83	4.6'	3.6'	2'	2.0'	102	5.7'	2.9'	1'	1.7'	144	22.3'	2.1'
				5'	46	5.2'	5.2'	5'	2.9'	30	7.8'	6.0'	3'	3.0'	45	8.6'	4.4'	2'	3.5	36	44.5	4.2'
				7'	23	7.3'	7.3'	7'	4.0'	15	10.7'	8.4'	4'	4.0'	25	11.4'	5.9'	3'	5.2'	16	66.8'	6.2'
				9'	14	9.4'	9.4'	9'	5.2'	9	13.7'	10.8'	5'	5.0'	16	14.3	7.4'	4'	6.9'	9	89.1'	8.3'

Job Information **Type:**

Lightolier a Genlyte Thomas Company www.lightolier.com
631 Airport Road, Fall River, MA 02720 • (508) 679-8131 • Fax (508) 674-4710
We reserve the right to change details of design, materials and finish.
© 2002 Genlyte Thomas Group LLC (Lightolier Division) • A0902

LIGHTOLIER®

NAOMI MILLER
LIGHTING DESIGN
Fixture Type: PAR 38 Trackhead

ProSpec™ Track Lighting **26238**

Ring PAR38

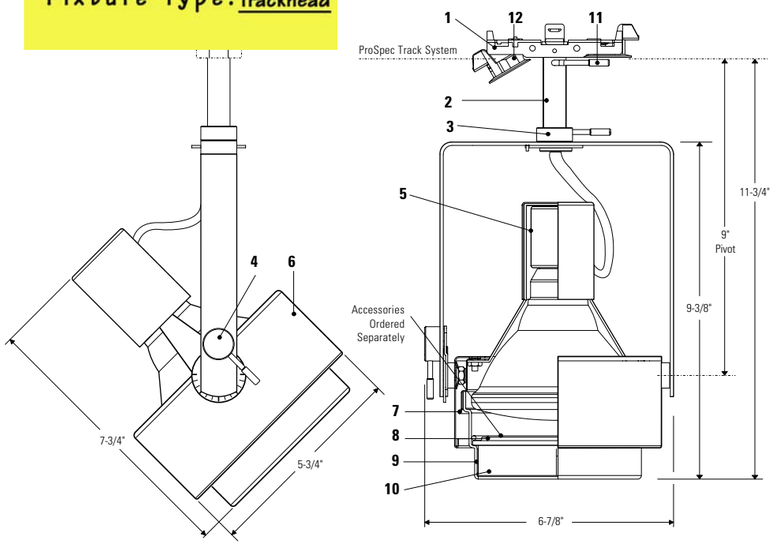

Ordering Information

Catalog No.	Finishes	Mountings	Lamps
26238 WH	Matte White	ProSpec™ Track System	PAR38 250W Max.
26238 BK	Matte Black		

Features

1. **Track attachment fitting:** die-cast aluminum with separate mechanical and electrical functions. Fitting cannot be engaged or disengaged while fixture is powered. Polarity is not a concern with ProSpec track because of its symmetrical positioning of circuits within the track, adapters are reversed to access one or the other circuit.
2. **Stem:** 5/8" O.D. .049" wall, stainless steel.
3. **Horizontal Locking feature:** Machined knob mechanisms permit the locking of horizontal aiming position. Adjustment range is: horizontal 0-350°. Indicator guide with 45° intervals allows precise fixture aiming.
4. **Vertical Locking feature:** Machined knob mechanisms permit the locking of vertical aiming position. Adjustment range is: vertical 0° (nadir) - 90°. Indicator guide with 15° intervals allows precise fixture aiming
5. **Lampholder:** porcelain, medium base, nickel plated screw shell, #18 ga. braided SF-1 leads.
6. **Housing:** 20 ga. (.036) steel, hemmed front edge for stiffness, prevents chipping and enhances appearance.
7. **Lamp and accessory support:** .032 steel, flared for easy entry of accessory cartridge, matte black finish.
8. **Lens retaining ring:** .125" spring steel.
9. **Accessory cartridge:** formed aluminum, installs and removes with a twist and lock action. Holds three accessories max. plus cross blade baffle; black matte finish.
10. **Cross blade baffle:** .070" extruded aluminum, black matte finish. 1" deep, removable.
11. **Lever:** energizes fixture by 90° rotation.
12. **Clamping tabs:** expands or releases gripper springs from track ledge; gripper springs hold attachment fitting securely within track.

Finish

All painted finishes are powder coated baked enamel.

Options & Accessories

Accessories: 4 3/4" dia. series. Filters, lenses, screens and louvers. 150W max.when using accessories.

Electrical

Electrical components: High temperature polycarbonate moldings. Contacts: Heavy gauge 1/2 hard brass developed for Lightolier's "U" shaped track conductors.

Labels

UL; I.B.E.W. U.S. & Foreign Patents Pending

Job Information **Type:**

Job Name:

Cat. No.:

Lamp(s):

Notes:

Lightolier a Genlyte Thomas Company www.lightolier.com
631 Airport Road, Fall River, MA 02720 • (508) 679-8131 • Fax (508) 674-4710

LIGHTOLIER®

NAOMI MILLER
LIGHTING DESIGN
Fixture Type: PAR 38 Trackhead

ProSpec™ Track Lighting **26238**

Ring PAR38

Lighting Data

Aiming Angle: 0° 30° 45° or 60° Horizontal 30° 45° or 60° Vertical

L Beam length
W Beam width
C Distance to center of beam
D Distance
A Aiming angle
FC Footcandles

L and **W** are the outer points where the candlepower drops to 50% of the maximum. **FC** are the initial footcandles at the center of the beam.

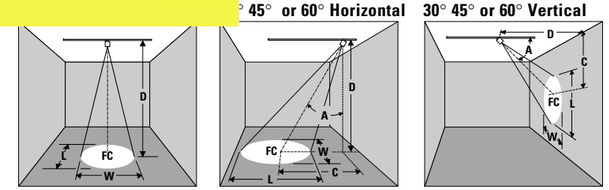

LAMP

Lamp	Beam Spread 50% Max CP	Beam Center C.P. Candelas	Rated Life-Hrs	0° AIMING ANGLE D	FC	L	W	A=30° AIMING ANGLE D	C	FC	L	W	A=45° AIMING ANGLE D	C	FC	L	W	A=60° AIMING ANGLE D	C	FC	L	W
90W PAR38 NSP (T-H)	9°	19500	2500	10'	195	1.6'	1.6'	8'	4.6'	198	1.7'	1.5'	6'	6.0'	192	1.9'	1.3'	4'	6.9'	152	2.6'	1.3'
				15'	87	2.4'	2.4'	12'	6.9'	88	2.5'	2.2'	9'	9.0'	85	2.9'	2.0'	6'	10.4'	60	3.8'	1.9'
				20'	49	3.1'	3.1'	16'	9.2'	49	3.4'	2.9'	12'	12.0'	48	3.8'	2.7'	8'	13.9'	38	5.1'	2.5'
				25'	31	3.9'	3.9'	20'	11.5'	32	4.2'	3.6'	15'	15.0'	31	4.8'	3.3'	10'	17.3'	24	6.4'	3.1'
90W PAR38 SP (T-H)	12°	14500	2500	8'	227	1.7'	1.7'	7'	4.0'	192	2.0'	1.7'	5'	5.0'	205	2.1'	1.5'	3'	5.2'	201	2.6'	1.3'
				12'	101	2.5'	2.5'	10'	5.8'	94	2.8'	2.4'	7'	7.0'	105	3.0'	2.1'	4'	6.9'	113	3.5'	1.7'
				16'	57	3.4'	3.4'	13'	7.5'	56	3.7'	3.2'	9'	9.0'	63	3.8'	2.7'	5'	8.7'	73	4.3'	2.1'
				20'	36	4.2'	4.2'	16'	9.2'	37	4.5'	3.9'	11'	11.0'	42	4.7'	3.3'	6'	10.4'	50	5.2'	2.5'
90W PAR38 FL (T-H)	28°	4500	2500	6'	125	3.0'	3.0'	5'	2.8'	117	3.4'	2.9'	3'	3.0'	177	3.2'	2.1'	2'	3.5'	141	4.9'	2.0'
				8'	70	4.0'	4.0'	7'	4.0'	60	4.8'	4.0'	5'	5.0'	64	5.3'	3.5'	3'	5.2	63	7.4'	3.0'
				10'	45	5.0'	5.0'	9'	5.2'	36	6.1'	5.2'	7'	7.0'	32	7.4'	4.8'	4'	6.9'	35	9.8'	4.0'
				12'	31	6.0'	6.0'	11'	6.4'	24	7.5'	6.3'	9'	9.0'	20	9.6'	6.3'	5'	8.7'	23	12.4'	5.0'
90W PAR38 WFL (T-H)	60°	1300	2500	3'	144	3.5'	3.5'	3'	1.7'	94	5.2'	4.0'	2'	2.0'	115	6.9'	3.3'	1'	1.7'	163	NA*	2.3'
				5'	52	5.8'	5.8'	5'	2.9'	34	8.7'	6.7'	3'	3.0'	51	10.4'	4.9'	2'	3.5	41	NA*	4.6'
				7'	27	8.1'	8.1'	7'	4.0'	17	12.1'	9.3'	4'	4.0'	29	13.9'	6.5'	3'	5.2'	18	NA*	6.9'
				9'	16	10.4'	10.4'	9'	5.2'	10	15.8'	12.0'	5'	5.0'	18	17.3'	8.2'	4'	6.9'	10	NA*	9.2'
100W PAR38 SP (T-H IR)	10°	29000	3000	10'	290	1.7'	1.7'	8'	4.6'	294	1.9'	1.6'	6'	6.0'	285	2.1'	1.5'	4'	6.9'	227	2.9'	1.4'
				15'	129	2.6'	2.6'	12'	6.9'	131	2.8'	2.4'	9'	9.0'	127	3.2'	2.2'	6'	10.4'	101	4.3'	2.1'
				20'	73	3.5'	3.5'	16'	9.2'	74	3.7'	3.2'	12'	12.0'	71	4.2'	3.0'	8'	13.9'	57	5.7'	2.8'
				25'	46	4.4'	4.4'	20'	11.5'	47	4.7'	4.0'	15'	15.0'	46	5.3'	3.7'	10'	17.3'	36	7.2'	3.5'
100W PAR38 NFL (T-H IR)	27°	7500	3000	7'	153	3.4'	3.4'	6'	3.5'	135	3.9'	3.3'	4'	4.0'	166	4.1'	2.7'	2'	3.5'	234	4.6'	1.9'
				10'	75	4.8'	4.8'	9'	5.2'	60	5.9'	5.0'	6'	6.0'	74	6.1'	4.1'	3'	5.2'	104	7.0'	2.9'
				13'	44	6.2'	6.2'	12'	6.9'	34	7.8'	6.7'	8'	8.0'	41	8.2'	5.4'	4'	6.9'	59	9.3'	3.6'
				16'	29	7.7'	7.7'	15'	8.7'	22	9.8'	8.3'	10'	10.0'	27	10.2'	6.8'	5'	8.7'	38	11.6'	4.8'
100W PAR38 FL (T-H IR)	40°	3400	3000	6'	94	4.4'	4.4'	5'	2.9'	88	5.1'	4.2'	3'	3.0'	134	5.0'	3.1'	2'	3.5'	106	9.7'	2.9'
				8'	53	5.8'	5.8'	7'	4.0'	45	7.1'	5.9'	5'	5.0'	48	8.4'	3.1'	3'	5.2	47	14.5'	4.4'
				10'	34	7.3'	7.3'	9'	5.2'	27	9.1'	7.6'	7'	7.0'	25	11.7'	7.2'	4'	6.9'	27	19.3'	5.8'
				12'	24	8.7'	8.7'	11'	6.4'	18	11.2'	9.2'	9'	9.0'	15	15.1'	9.3'	5'	8.7'	17	24.2'	7.3'
120W PAR38 NSP (T-H)	10°	25000	3000	10'	250	1.7'	1.7'	8'	4.6'	254	1.9'	1.6'	6'	6.0'	246	2.1'	1.5'	4'	6.9'	195	2.9'	1.4'
				15'	111	2.6'	2.6'	12'	6.9'	113	2.8'	2.4'	9'	9.0'	109	3.2'	2.2'	6'	10.4'	87	4.3'	2.1'
				20'	63	3.5'	3.5'	16'	9.2'	63	3.7'	3.2'	12'	12.0'	61	4.2'	3.0'	8'	13.9'	49	5.7'	2.8'
				25'	40	4.4'	4.4'	20'	11.5'	41	4.7'	4.0'	15'	15.0'	39	5.3'	3.7'	10'	17.3'	31	7.2'	3.5'
120W PAR38 FL (T-H)	30°	5000	3000	6'	139	3.2'	3.2'	5'	2.9'	130	3.7'	3.1'	3'	3.0'	196	3.5'	2.3'	2'	3.5'	156	5.5'	2.1'
				8'	78	4.3'	4.3'	7'	4.0'	66	5.1'	4.3'	5'	5.0'	71	5.8'	3.8'	3'	5.2	69	6.2'	3.2'
				10'	50	5.4'	5.4'	9'	5.2'	40	6.6'	5.6'	7'	7.0'	36	8.1'	5.3'	4'	6.9'	39	10.9'	4.3'
				12'	35	6.4'	6.4'	11'	6.4'	27	8.1'	6.8'	9'	9.0'	22	10.4'	6.6'	5'	8.7'	25	13.7'	5.4'
120W PAR38 WFL (T-H)	50°	2000	3000	4'	125	3.7'	3.7'	3'	1.7'	144	4.0'	3.2'	3'	3.0'	79	7.2'	4.0'	1'	1.7'	250	10.7'	1.9'
				6'	56	5.6'	5.6'	5'	2.9'	52	6.7'	5.4'	4'	4.0'	44	9.5'	5.3'	2'	3.5	63	21.5'	3.7'
				8'	31	7.5'	7.5'	7'	4.0'	27	9.4'	7.5'	5'	5.0'	28	11.9'	6.6'	3'	5.2'	28	32.2'	5.6'
				10'	20	9.3'	9.3'	9'	5.2'	16	12.1'	9.7'	6'	6.0'	20	14.3'	7.9'	4'	6.9'	18	42.9'	7.5'
250W PAR38 SP (T-H)	11°	40000	4200	15'	178	2.9'	2.9'	10'	5.6'	262	2.6'	2.2'	8'	8.0'	221	3.1'	2.2'	5'	8.7'	200	4.0'	1.9'
				20'	100	3.9'	3.9'	15'	8.7'	115	3.9'	3.3'	12'	12.0'	98	4.7'	3.3'	8'	13.9'	78	6.3'	3.1'
				25'	64	4.8'	4.8'	20'	11.5'	65	5.2'	4.4'	16'	16.0'	55	6.2'	4.4'	11'	19.1'	41	8.7'	4.2'
				30'	44	5.8'	5.8'	25'	14.4'	42	6.4'	5.6'	20'	20.0'	35	7.8'	5.4'	14'	24.2'	26	11.1'	5.4'
250W PAR38 FL (T-H)	32°	8000	4200	7'	163	4.0'	4.0'	6'	3.5'	144	4.7'	4.0'	4'	4.0'	177	5.0'	3.2'	2'	3.5'	250	6.1'	2.3'
				10'	80	5.7'	5.7'	9'	5.2'	64	7.1'	6.0'	6'	6.0'	79	7.5'	4.9'	3'	5.2'	111	9.1'	3.4'
				13'	47	7.5'	7.5'	12'	6.9'	35	9.4'	7.9'	8'	8.0'	44	10.0'	6.5'	4'	6.9'	63	12.2'	4.6'
				16'	31	9.2'	9.2'	15'	8.7'	23	11.8'	9.9'	10'	10.0'	28	12.5'	8.1'	5'	8.7'	40	15.2'	5.7'

Job Information **Type:**

Lightolier a Genlyte Thomas Company www.lightolier.com
631 Airport Road, Fall River, MA 02720 • (508) 679-8131 • Fax (508) 674-4710
We reserve the right to change details of design, materials and finish.
© 2002 Genlyte Thomas Group LLC (Lightolier Division) • A0902

LIGHTOLIER®

NAOMI MILLER
LIGHTING DESIGN

Fixture Type: T1

pec™ Track Lighting **26000**

Track

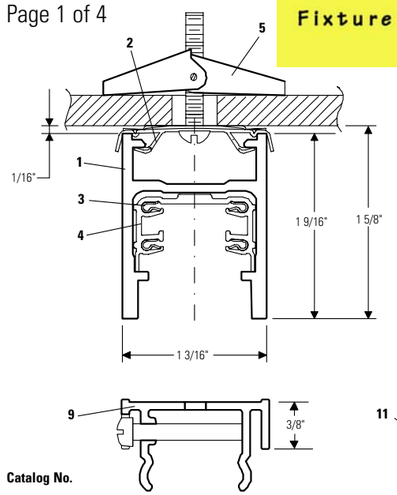

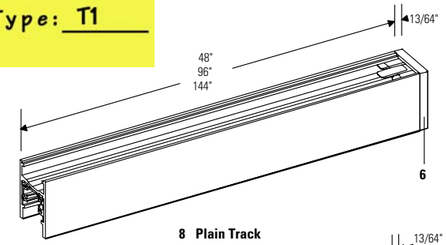

8 Plain Track

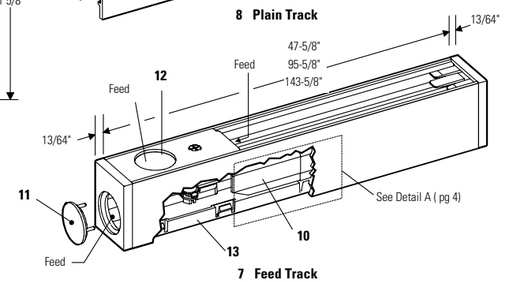

7 Feed Track

Catalog No.	Plain Track			Feed Track		
Finishes:	4'	8'	12'	4'	8'	12'
Matte White	26004WH	26008WH	26012WH	26001WH	26002WH	20613WH
Matte Black	26004BK	26008BK	26012BK	26001BK	26002BK	20613BK

Features

1. **Track:** 6063T-5 structural aluminum extrusion; average wall thickness .08.
2. **Flush Mounting Clips:** spring steel. Black or white nylon coated to prevent rusting and marking ceiling. Furnished with track unit.
3. **Conductors:** "U" shaped copper conductor, increases contact surface area minimizes contact resistance provides reliable positive connection.
4. **Insulated liner:** .040" wall, high temperature extruded thermoplastic.
5. **Toggle Bolts and Screws:** furnished with track unit.
6. **Dead End Cap:** molded thermoplastic.
7. **Feed Track.**
8. **Plain Track.**
9. **Standoff Mounting Clip:** 1/16" extruded aluminum, one screw mounting, one screw tightening. 3/8" gap helps to compensate for ceiling irregularities. Provides rigid support for dense loading of track.
10. **Feed-in Connector Module:** included with feed track.
11. **Removable Hole Plug:** for surface feed 3/8" or 1/2" trade size connector.
12. **KO:** accepts, 3/8" or 1/2" trade connector for feed.
13. **Wire Cover:** molded thermoplastic.

Mechanical

Track units plug together and lock securely to prevent accidental separation. ProSpec™ track fixtures can be attached at any point along the track. Track units may be field cut.

Electrical

(2) circuits. Each circuit is 120V, 60Hz, 20 AMP compatible. Each circuit has dedicated neutral for maximum control flexibility. Track units are continuously grounded throughout. Electrical conductors are concealed in an insulated liner in the track. Intended for wiring to branch circuit building wire with ground, in accordance with National and local codes.

Mounting

Surface: ProSpec™ track can be surface mounted either flush to a surface or with clips

1/16" clips are provided with the track and space the track 1/16" from the ceiling.

3/8" standoff clips can be ordered separately. These space the track 3/8" from the ceiling, provide a rigid support and a pleasing appearance on uneven ceilings.

Stem: ProSpec track can also be suspended from horizontal surfaces or sloped surfaces. Stems can be field cut to provide any length from a surface with a maximum length of 3".

A sloped surface (ceiling) adapter is available to allow the track to hang vertically with the track opening horizontal to the floor.

Finish

All painted finishes are baked enamel.

Label

UL, I.B.E.W.; Patent Pending

Job Information **Type:**

Job Name:

Cat. No.:

Lamp(s):

Notes:

Lightolier a Genlyte Thomas Company www.lightolier.com
631 Airport Road, Fall River, MA 02720 • (508) 679-8131 • Fax (508) 674-4710
We reserve the right to change details of design, materials and finish.

LIGHTOLIER®

KIM LIGHTING

Scarab™ 6755

Die-Cast Brass, ED17 Metal Halide / High Pressure Sodium

revision 12/01/05 • 6755.pdf

Type:
Job:
Fixture Catalog number:

_____ / _____ / _____ / _____
Fixture Reflector Lamp Mode Finish

Fixture Options:

Ordered Separately from Fixture
See pages 2-3

Remote Mounting Options:

Ordered Separately from Fixture
See pages 4-7

NAOMI MILLER
LIGHTING DESIGN

Fixture Type: X1

Specifications

Housing: Die-cast brass body, lamp housing and socket enclosure.

Swivel: Provides horizontal rotation independent of the threaded mount. Swivel locked by ¼-20 stainless set screw. Die-cast brass with locking teeth and ½″ solid brass NPT mount.

Reflector: Spun specular Alzak® aluminum.

Lens Frame: Integral die-cast brass lens ring and glare shield.

Lens: Tempered clear soda lime glass with silicone gasket. Flush with lens frame to promote water runoff when positioned upward.

Gasketing: Silicone gaskets used throughout.

Socket: Porcelain medium base.

Wiring: No. 18AWM rated 105°C.

Ballast: High power factor, long range ignitors, -20°F. starting, mounted on tray, 120 volt standard.

Ballast Box: High temperature, compression molded featuring long-fiber fiberglass impregnated heavy wall construction. Wall separates ballast chamber from splice compartments, splice area 32 cu in.; prewired, two anti-siphon plugs to and from ballast chamber. Conduit entry; two ¾″ NPT for through wiring, one ½″ NPT for remote access.

Ballast Cover: Cast bronze, supplied with ½″ NPSM for direct mount, with stainless steel set screw lock. Flat for remote mount.

Finish: Natural Brass **(NB)** and Verde Green Patina **(VG)**.

Certification: UL Listed to U.S. and Canadian safety standards for wet locations. Fixture manufacturer shall employ a quality program that is certified to meet the ISO 9001:2000 standard.

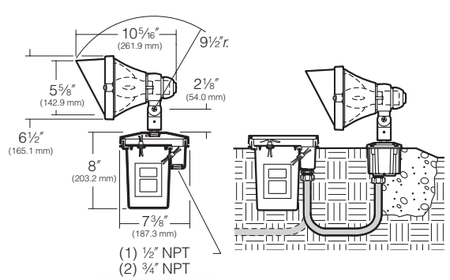

JBR mount shown, purchased separately.

ORDERING INFORMATION

Fixture

- ☐ **6755D** Direct Mounting
- ☐ **6755R** Remote Mounting

Reflector

- ☐ **SP** Spot
- ☐ **NF** Narrow Flood

Lamp Mode[1]

	☐ **70PMH120** ☐ **70PMH208** ☐ **70PMH240** ☐ **70PMH277** ☐ **70PMH347**	☐ **100PMH120** ☐ **100PMH208** ☐ **100PMH240** ☐ **100PMH277** ☐ **100PMH347**	☐ **150PMH120** ☐ **150PMH208** ☐ **150PMH240** ☐ **150PMH277** ☐ **150PMH347**
Lamp	ED-17	ED-17	ED-17
Socket	Medium Base	Medium Base	Medium Base
ANSI Ballast Type	M-98	M-90	M-102
	☐ **175MH120** ☐ **175MH208** ☐ **175MH240** ☐ **175MH277** ☐ **175MH347**	☐ **70HPS120** ☐ **70HPS208** ☐ **70HPS240** ☐ **70HPS277** ☐ **70HPS347**	☐ **100HPS120** ☐ **100HPS208** ☐ **100HPS240** ☐ **100HPS277** ☐ **100HPS347**
Lamp	ED-17	ED-17	ED-17
Socket	Medium Base	Medium Base	Medium Base
ANSI Ballast Type	M-57	S-62	S-54
	☐ **150HPS120** ☐ **150HPS208** ☐ **150HPS240** ☐ **150HPS277** ☐ **150HPS347**		
Lamp	ED-17		
Socket	Medium Base		
ANSI Ballast Type	S-55		

[1] **70 PMH 120**
- 120 = Line Volts
- PMH = Lamp Type: Pulse Start Metal Halide
- MH = Metal Halide
- HPS = High Pressure Sodium
- 70 = Lamp Watts

Finish

- ☐ **NB** Natural Brass
- ☐ **VG** Verde Green Patina

10 YEAR LIMITED WARRANTY

c UL us LISTED

U.S. PATENT D424,731

HUBBELL®
Hubbell Lighting, Inc.

KIM LIGHTING RESERVES THE RIGHT TO CHANGE SPECIFICATIONS WITHOUT NOTICE.

NAOMI MILLER
LIGHTING DESIGN

Fixture Type: X1

Scarab™ 6755

Die-Cast Brass, ED17 Metal Halide / High Pressure Sodium

revision 12/01/05 • 6755.pdf

Remote Mounting Options

Ordered Separately from Fixture

Surface Mount

Cat. No.	Finish
☐ **J-27N/BL**	Black
☐ **J-27N/DB**	Dark Bronze
☐ **J-27N/GR**	Verde Green
☐ **No Option**	

Cast, low copper (<0.6% Cu) aluminum with ½″ NPSM fixture mount. Internal set screw provided for locking position. 5 cu in. internal volume. Super TGIC powder coat paint over clear anodizing and titanated zirconium conversion.

Application Notes

- Utilizing conveniently located ballast box, fixtures can be surface mounted.

CAUTION: Lamp and ballast must be of equal wattage. Ballast box must be installed high enough to encourage water drainage away from the housing.

NOTE: Maximum remote mounting distance for 70PMH, 100PMH, and 150PMH fixtures is 50′; for 70HPS, 100HPS, and 150HPS fixtures is 50′; and for 175MH is 200′.

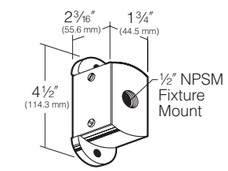

© 2005 KIM LIGHTING INC. • P.O. BOX 60080, CITY OF INDUSTRY, CA 91716-0080 • TEL: 626/968-5666 • FAX: 626/369-2695 5643505335

HYDREL

An Acuity Brands Company

NAOMI MILLER
LIGHTING DESIGN

Fixture Type: Z1

4426
LED BASE MOUNT
60W LED FOUNTAIN
DMX COLOR CHANGING

TYPE

PART

Model	Material	LED Type	LED Color	Voltage	Distribution
Lens	Mounting	Control	Com. to Fixture	Cord Set Length	

DESCRIPTION

The 4426 Base Mount is designed for use in fountains, reflecting pools, and illuminating waterfalls. This unit uses a Red, Green, and Blue (RGB) underwater color balanced LED array to create DMX controlled color changing lighting effects. Color control is achieved through four channels per fixture, standard DMX512 hardware, at a maximum of 44 frames per second. All channels have logarithmic power for finer color and intensity control. The fourth channel, Intensity, allows the user to vary brightness without affecting the color. The integral power supply and DMX control modules are enclosed in an attached sealed bronze combination box. The proprietary DMX control module senses the LED temperature and adjusts the LED power accordingly to yield a lamp life of up to 50,000 hours of operation. This lamp life exceeds any other fixture designed for this use. For power and signal hook-up, the integral combination box includes a minimum of 10' of submersible rated power cable and a minimum of 10' of submersible rated DMX signal cable.

FEATURES & SPECIFICATIONS

FIXTURE HOUSING, ROCK GUARD AND BASE: Heavy wall cast bronze construction. Natural cast bronze finish.

LED TYPE: 60 Watt RGB LED array. (LED Board included.)

CONTROL: Standard DMX512. 3-Channels per fixture: Red, Blue, Green or 4-channels per fixture: Red, Green, Blue and Intensity.

COMMUNICATION TO FIXTURE: DMX512 direct.

VOLTAGE: 120VAC 60HZ only.

LENS: Clear Flat Tempered Borosilicate.

GASKET: Single piece molded U-shaped silicone gasket.

CORD: Minimum of 10' of #16/3ST submersible rated cord for standard 120VAC line, minimum of 25' of submersible rated data cord for DMX512 signal. Cord entrance is epoxy encapsulated. Cord length must be specified.

FACTORY LEAK TESTED: Fixtures are tested at 10 PSI (0.70kg/cm2) internal pressure while totally submerged in water.

LOW WATER PROTECTION: Temperature sensing circuit reduces power to LEDs to prevent damage.

FASTENERS: Stainless steel.

LISTING: U.L.

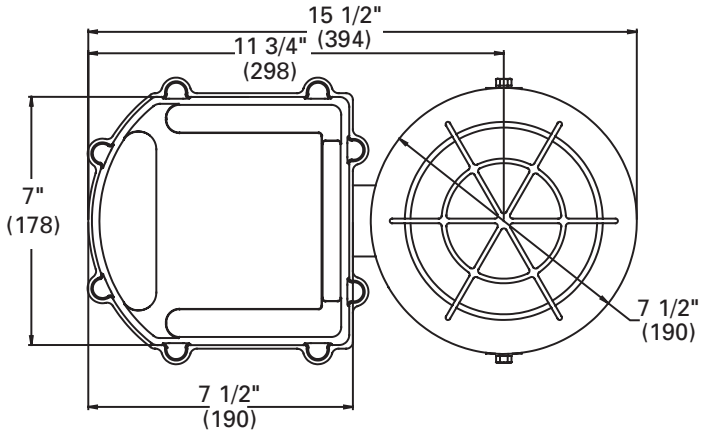

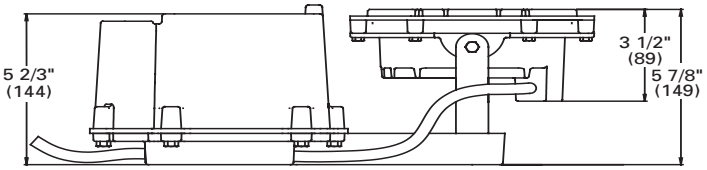

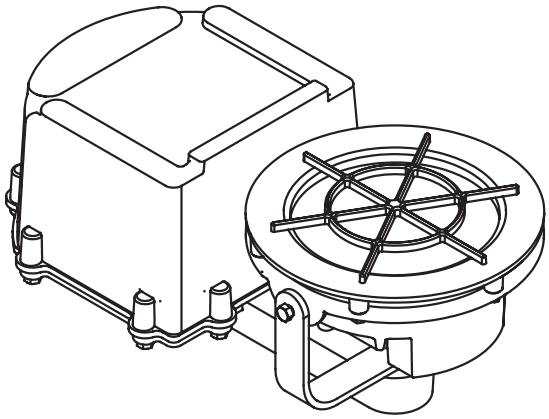

Hydrel is an ISO 9001 Certified Manufacturer

NOTE: HYDREL RESERVES THE RIGHT TO MODIFY SPECIFICATION WITHOUT NOTICE. Any dimension on this sheet is to be assumed as a reference dimension: "Used for information purposes only. It does not govern manufacturing or inspection requirements." (ANSI Y14.5-1973)

APPROVALS

6/28/07
4426_BM_LED_COLOR CHANGING_REV0

12881 Bradley Ave
Sylmar, CA 91342
Phone: 818-362-9465
Fax: 818-362-6548
www.hydrel.com

HYDREL
An Acuity Brands Company

NAOMI MILLER
LIGHTING DESIGN

Fixture Type: Z1

LED BASE MOUNT ORDERING INFORMATION

60 Hz Application

Choose the boldface catalog nomenclature that best suits your needs.

PART NO.

_____ _____ _____ _____ _____ _____ _____ _____ _____ _____ _____

EXAMPLE:

4426 B 60LED RGB 120 SP FLC BM 4DMX DDX CSL50

Model
- ☐ **4426**

LEDType
- ☐ **60LED** 60 Watts

Voltage
- ☐ **120**

Lens
- ☐ **FLC** Flat Lens Clear

Mounting
- ☐ **BM** Base Mt

Communication to Fixture
- ☐ **DDX** Direct DMX

Material
- ☐ **B** Bronze
- ☐ **SWB** Saltwater Bronze

LED Color
- ☐ **RGB** Mixing

Distribution
- ☐ **SP** Spot
- ☐ **MFL** Medium Flood
- ☐ **WFL** Wide Flood

Control

3-Channel
- ☐ **3DMX** DMX 512

4-Channel
- ☐ **4DMX** DMX 512

Cord Set Length
- ☐ **CSL__** 10'-120' of cord available in 5' increments

TYPICAL SYSTEM LAYOUT FOR DIRECT DMX 512 COMMUNICATION:

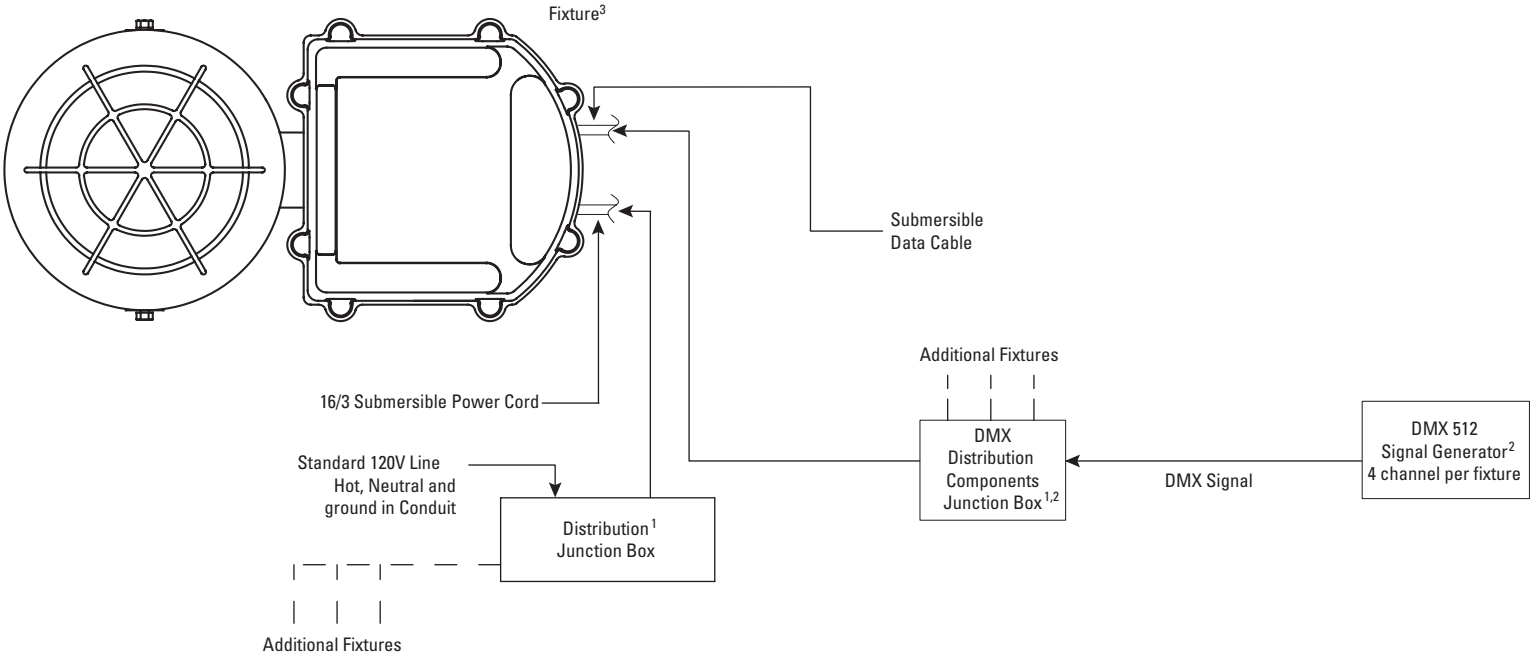

Notes:

[1] Junction Box (Sold Separately)
[2] DMX Distribution Components and Signal Generator (by others)
[3] Fixture cables (Power and Signal) connect to separate junction boxes
a) First Run - 120V Power Supply
b) Second Run - DMX512 Signal

Hydrel is an ISO 9001 Certified Manufacturer

6/28/07
4426_BM_LED_COLORCHANGING_REV0

12881 Bradley Ave.
Sylmar, CA 91342
Phone: 818-362-9465
Fax: 818-362-6548
www.hydrel.com

NAOMI MILLER
LIGHTING DESIGN

Fixture Type: Z2

HYDREL
An Acuity Brands Company

6700
SEALED IN-GRADE UPLIGHT

TYPE

PART NUMBER

Model	Material	Lamp Type	Voltage	Distribution
Lens	Conduit Entries	Accessories	Options	Lamp

DESCRIPTION

The 6700 Series sealed outdoor lighting fixture offers high performance and durability in an in-grade fixture. Many lamping options and distributions are available including HID lamps to 175 Watts. Integral ballast and junction box add further to the Series' reliability.

SPECIFICATIONS

MATERIAL: Heavy wall cast bronze body and door.

LAMP: **Incandescent:** PAR lamps or T4 MC to 250 watt maximum.
HID: T4, T6 or E17 to 175 watt maximum.
Fluorescent: Triple tube lamps to 42 watt maximum.

VOLTAGE: See ordering guide

DISTRIBUTIONS : Narrow spot through wide flood available. See ordering guide for complete list of distribution options.

REFLECTORS: (Non-reflectorized lamps): High purity anodized specular or semi-specular materials in various distributions provide maximum performance and uniformity. Par Lamps and some reflectors are adjustable with 15° tilt standard(see ordering guide).

LENS: Tempered Clear Flat Borosilicate glass.

CONDUIT ENTRIES: Two 1/2" or 3/4" NPT entries available bottom or side.

ACCESSORIES: Internal & external glare control, rock guards, lexan covers and trim rings available.

BALLAST: Integrally mounted ballast, rated for low starting temperatures. High Power Factor Magnetic Ballasts standard, electronic ballasts also available.

FINISH: Raw bronze.

LISTING: U.L., C.UL,

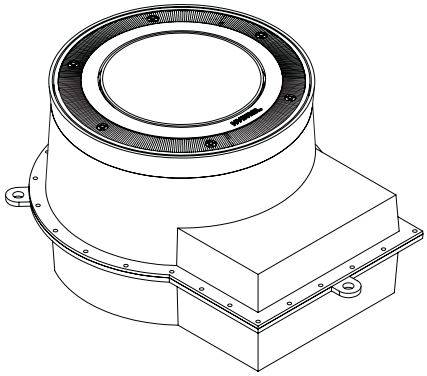

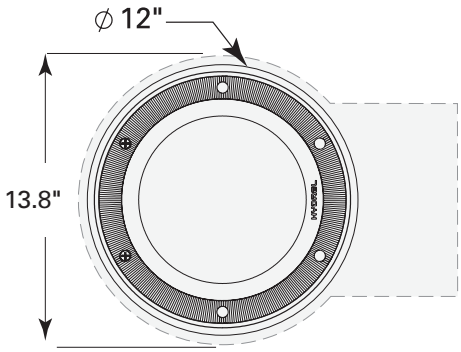

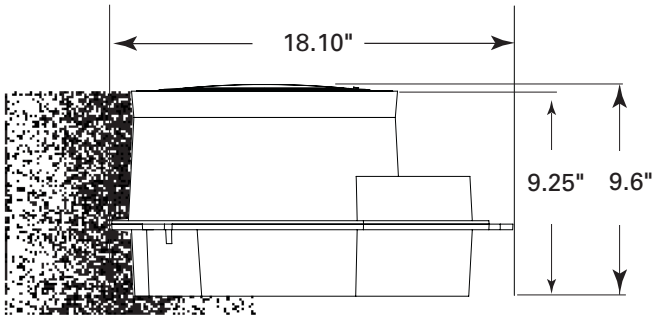

APPROVALS

NOTE: HYDREL RESERVES THE RIGHT TO MODIFY SPECIFICATION WITHOUT NOTICE. Any dimension on this sheet is to be assumed as a reference dimension: "Used for information purposes only. It does not govern manufacturing or inspection requirements." (ANSI Y14.5-1973)

Hydrel is an ISO 9001 Certified Manufacturer

Rev 8/24/07
6700_REV3

12881 Bradley Ave
Sylmar, CA 91342
Phone: 818-362-9465
Fax: 818-362-6548
www.hydrel.com

HYDREL
An Acuity Brands Company

NAOMI MILLER
LIGHTING DESIGN

Fixture Type: Z2

6700 ORDERING INFORMATION

60 Hz Application

Choose the boldface catalog nomenclature that best suits your needs.

PART NO.

EXAMPLE:

6700	B	70CM	277	MFL	FLC	34B	IHL	SF	LP

Model

☐ **6700**

Material

☐ **B** Bronze

Lamp Type

INCANDESCENT[1]

- ☐ **P3050I** PAR30 Med.
- ☐ **P3075I** PAR30 Med.
- ☐ **P38100I** PAR38 Med.
- ☐ **P38150I** PAR38 Med.
- ☐ **P38250I** PAR38 Med.
- ☐ **100Q** T4 MC
- ☐ **150Q** T4 MC
- ☐ **250Q** T4 MC

FLUORESCENT

- ☐ **18TRT** Triple Tube Gx24Q-2
- ☐ **26TRT** Triple Tube Gx24Q-3
- ☐ **32TRT** Triple Tube Gx24Q-3
- ☐ **42TRT** Triple Tube Gx24Q-4

MH

- ☐ **70M** ED17 Med.
- ☐ **70CM** ED17 Med.
- ☐ **100M** ED17 Med.
- ☐ **100CM** ED17 Med.
- ☐ **150M** ED17 Med.
- ☐ **150CM** ED17 Med.
- ☐ **175M** ED17 Med
- ☐ **35CMT6** T6 G12
- ☐ **35CMT4** T4 G8.5
- ☐ **70CMT4** T4 G8.5
- ☐ **70CMT6** T6 G12
- ☐ **150CMT6** T6 G12
- ☐ **P3035CM** PAR30Med.
- ☐ **P3070CM** PAR30Med.
- ☐ **P3870M** PAR38Med.
- ☐ **P3870CM** PAR38Med.
- ☐ **P38100M** PAR38Med.
- ☐ **P38100CM** PAR38Med.

HPS

- ☐ **50S** E17 Med.
- ☐ **70S** E17 Med.
- ☐ **100S** E17 Med.
- ☐ **150S** E17 Med.

Voltage

- ☐ **120**
- ☐ **208**
- ☐ **240**
- ☐ **277**
- ☐ **347**
- ☐ **120/277**
- ☐ **TB**
- ☐ **MVOLT**[2]

Distribution

- ☐ **NSP**[3] Narrow Spot
- ☐ **SP**[6] Spot
- ☐ **NFL** Narrow Flood
- ☐ **MFL** Medium Flood
- ☐ **FL**[4,6] Flood
- ☐ **WFL**[6] Wide Flood
- ☐ **WWD**[5] Wall Wash
- ☐ **ASY**[7] Asymetric

Performance Optics with 15° reflector tilt

- ☐ **NSP**[3] Narrow Spot
- ☐ **MFL**[3] Medium Flood

Lens

- ☐ **FLC** Flat Lens Clear
- ☐ **FLC5** Flat Lens Clear, 5°axial spread
- ☐ **FLC10** Flat Lens Clear, 10° tilt
- ☐ **FLC20** Flat Lens Clear, 20° tilt
- ☐ **FLF** Flat Lens Frosted
- ☐ **FLCAS** Flat Lens Clear, Anti-Slip
- ☐ **CLC** Convex Lens Clear
- ☐ **CLF** Convex Lens Frosted

Conduit Entries

- ☐ **12B** 1/2" NPT Bottom
- ☐ **12S** 1/2" NPT Side
- ☐ **34B**[14] 3/4" NPT Bottom
- ☐ **34S** 3/4" NPT Side

Accessories

Internal[7]

- ☐ **IHL** Internal Honeycomb Louver
- ☐ **ISS**[8] Internal Source Shield
- ☐ **WWL** Wall Wash Louver

Filters

- ☐ **LSF** Linear Spread Filter
- ☐ **CFAMB**[9] Color Filter Amber
- ☐ **CFBLU**[9] Color Filter Blue
- ☐ **CFGRN**[9] Color Filter Green
- ☐ **CFRED**[9] Color Filter Red

External[10]

- ☐ **GS** Glare Shield
- ☐ **LC** Lexan Cover
- ☐ **LS** Light Shield
- ☐ **RG**[10] Rock Guard
- ☐ **BTR** Brass Round

Options

Fusing

- ☐ **SF**[11] Single Fuse
- ☐ **DF**[12] Double Fuse

Ballasting

- ☐ **GEB**[13] Electronic Ballast

Lamping

☐ **LP** Lamp Installed

Notes:

1. Available in 120 Volt only.
2. MVOLT is standard on all Fluorescent lamps except 347V and MH lamps with GEB ballast option.
3. Available with T4 or T6 lamps only.
4. FL is only available with PAR lamps.
5. Not available with PAR lamps.
6. Not available with T40 orT6 Lamps.
7. Accessories are mutually exclusive, choose only one internal and one external per fixture.
8. ISS not available with WWD distribution or PAR lamps.
9. Color filter available to 100 Watt max. only.
10. RG and LC are not available with CLC or CLF lenses.
11. SF is only available with 120, 277 or 347 volts on HID only.
12. DF is only available with 208 or 240 volts on HID only.
13. Electronic ballasts only available with MH lamps to 150W and MVOLT voltage.
14. 34B is the default conduit entry and will be used if nothing is chosen.

Hydrel is an ISO 9001 Certified Manufacturer

Rev 8/24/07
6700_REV3

12881 Bradley Ave.
Sylmar, CA 91342
Phone: 818-362-9465
Fax: 818-362-6548
www.hydrel.com

HYDREL

An Acuity Brands Company

SUITABLE FOR WET LOCATIONS IP68 3M

M9420/M9440 SERIES
MODULAR IN-GRADE LUMINAIRE DOUBLE LENS

DESCRIPTION

Hydrel's M9420/M9440 Series modular in-grade lights are multipurpose units designed for uplighting of architectural and landscape features. These adjustable units can be flushed mounted into a variety of substrates or landscape materials.

The M9420/M9440 consists of a factory-sealed, thermally protected lamp module and encapsulated power module. The components are secured inside a heavy-duty polymer rough-in housing designed with channeled convective cooling, an integral junction box, and finish door trim assembly. These double lens units offer lamp module aiming, featuring Aim-Lock™ adjustment to allow for maintenance and relamping without re-aiming.

FEATURES & SPECIFICATIONS

DOOR MATERIAL: Cast Aluminum, cast bronze, cast aluminum or bronze with stainless perforated trim insert or Stainless Steel. Available in round or square door trim.

ROUGH-IN SECTION: Injection molded polymer with integral junction box for thru- branch wiring. The housing is U.V. stabilized, impact and corrosion resistant for use in all types of environments. The rough-in has a cylinder or side-car configuration and houses the lamp and power module components and top door finishing section.

LAMP MODULE: Stainless steel housing, factory-sealed and purged of all moisture for longer component life. The lamp module is suspended below the top door lens in a surface adjustable, 15° tilt mechanism. The insulating air layer helps to reduce surface temperatures. Lens is sealed with silicone gasket and stainless steel clamp band assembly with single fastener. Electrical connection to lamp module is done through a submersible quick pull plug connector with gold-plated contacts. Unit is thermally protected. LAMP INCLUDED.

LAMP TYPE: **Low Voltage:** MR-16 bi-pin base, 75 Watt max., PAR-36 screw terminal base, 75 Watt max.
Incandescent: T-4 quartz halogen mini-can base, 100 Watt max.
Fluorescent: Triple tube CFL 4-pin base, 32 Watt max.
HID: T-4 or T-6 bi-pin base, 70 Watt max.,PAR-20 or PAR-30 medium or E27 base, 70 Watt max. Color Corrected Metal Halide

If a specific lamp is desired, specify manufacturer's lamp number, most lamps can be supplied. LAMP INCLUDED.

VOLTAGE: See ordering guide.

LIGHT DISTRIBUTION: See ordering guide.

FINISHING SECTION: Double lens design includes door assembly with 360° Aim-Lock™ module support and tilt ring. Module indexing provides easy maintenance and relamping without re-aiming. Door trim locks into position with two stainless steel captive, tamper-resistant fasteners.

POWER MODULE: Ballast/Transformer is encapsulated in a custom designed heat-dissipating epoxy resin that also eliminates all moisture intrusion to the ballast. Module is provided with submersible rated cord leads for connection to integral junction box and lamp module. Standard ballast is high power factor, low starting temperature; fluorescent electronic or HID magnetic. HID electronic ballast also available.

CONDUIT ENTRIES: Two (2) bottom or side entries available. Box suitable for thru-branch wiring. Splicing volume is 25 in^3 (410 ccm).

NOTE: Potting compound (PC21) recommended for junction box splices. PC21 sold separately.

ACCESSORIES: See ordering guide.

FINISH: Finish is natural aluminum or bronze. Stainless steel door is brushed finish. Aluminum doors may be painted. See ordering guide for color options.

LISTING: U.L., CE

TYPE	JOB NAME

PART NUMBER

Model	Material	Lamp Type	Voltage	Distribution	Lens
Conduit Entries	Accessories	Options	Lamp	Finish	List

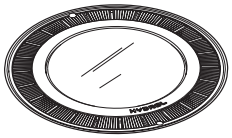

Bronze or Aluminum Round

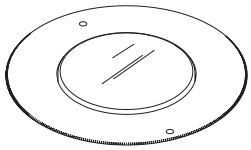

Stainless Steel Round

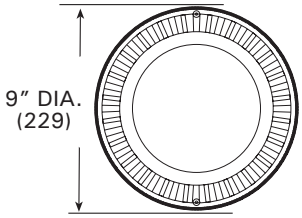

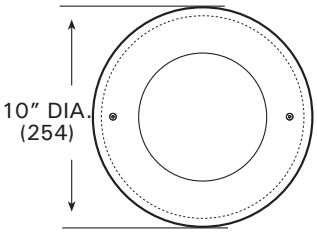

9" Bronze or Aluminum Square

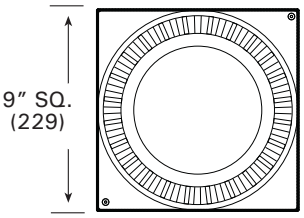

10" Stainless Steel Square

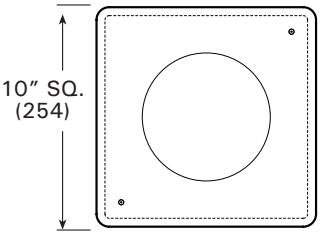

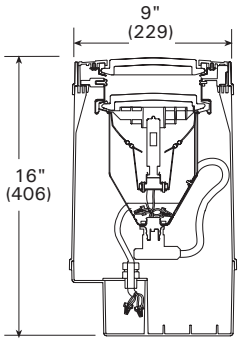

Incandescent and Fluorescent Rough-In Housing

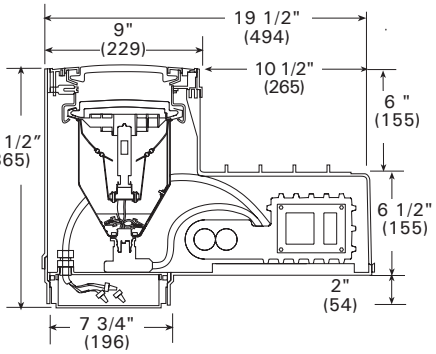

HID Rough-InHousing

NOTE: HYDREL RESERVES THE RIGHT TO MODIFY SPECIFICATION WITHOUT NOTICE. Any dimension on this sheet is to be assumed as a reference dimension: "Used for information purposes only. It does not govern manufacturing or inspection requirements." (ANSI Y14.5-1973)

APPROVALS

9/6/07
M9420_M9440_REV3

Hydrel is an ISO 9001 Certified Manufacturer

12881 Bradley Ave
Sylmar, CA 91342
Phone: 818-362-9465
Fax: 818-362-6548
www.hydrel.com

M9420/9440 ORDERING INFORMATION

60 Hz Application

Choose the boldface catalog nomenclature that best suits your needs.

PART NO.

EXAMPLE:

M9420 SS 70CMT6 120 NSP FLC10 34B ISS LP

Material*

- ☐ **A** Aluminum
- ☐ **B** Bronze
- ☐ **ASP**[1] Alum. Stainless Perf.
- ☐ **BBP**[1] Bronze Bronze Perf.
- ☐ **BSP**[1] Bronze Stainless Perf.
- ☐ **SS** Stainless Steel

Voltage*

- ☐ **12**[4]
- ☐ **120**
- ☐ **208**
- ☐ **220**
- ☐ **240**
- ☐ **277**
- ☐ **347**
- ☐ **MVOLT**[5]

Distribution[6]*

- ☐ **NSP** Narrow Spot
- ☐ **SP**[22] Spot
- ☐ **NFL**[22] Narrow Flood
- ☐ **MFL** Medium Flood
- ☐ **FL**[22] Flood
- ☐ **WFL**[22] Wide Flood
- ☐ **WWD**[7] Wall Wash Distribution
- ☐ **ASY**[8,22] Asymmetric

Conduit Entry

- ☐ **12B** 1/2" NPT bottom
- ☐ **12S** 1/2" NPT side
- ☐ **34B**[21] 3/4" NPT bottom
- ☐ **34S** 3/4" NPT side

Options

Fusing

- ☐ **SF**[16] Single Fuse
- ☐ **DF**[17] Double Fuse

Ballasting[18]

- ☐ **GEB** Electronic Ballast
- ☐ **MLEBAD**[19] Analog Dimming Ballast

Model*

- ☐ **M9420** Round
- ☐ **M9440** Square

Lamp Type*

Low Voltage

- ☐ **M50** MR16, GU5.3 base
- ☐ **M75** MR16, GU5.3 base
- ☐ **P3650ILV** PAR36, screw terminal base
- ☐ **P3675ILV** PAR36, screw terminal base

Incandescent[2]

- ☐ **P2050I** PAR20, med. base
- ☐ **P3050I** PAR30, med. base
- ☐ **P3075I** PAR30, med. base
- ☐ **100Q** T4, mini-can

Fluorescent

- ☐ **18TRT** Triple Tube, GX24q2 base
- ☐ **26TRT** Triple Tube, GX24q3 base
- ☐ **32TRT** Triple Tube, GX24q3 base

MH

- ☐ **20CMT4**[3] T4, G8.5 base
- ☐ **35CMT4**[3] T4, G8.5 base
- ☐ **35CMT6** T6, G-12 base
- ☐ **70CMT4** T4, G8.5 base
- ☐ **70CMT6** T6, G-12 base
- ☐ **P2035CM** PAR20, med. base
- ☐ **P3035CM** PAR30, med. base
- ☐ **P3070CM** PAR30, med. base

Lens[9]*

- ☐ **FLC** Flat Lens Clear
- ☐ **FLC5**[10] Flat Lens Clear, 5° axial
- ☐ **FLC10** Flat Lens Clear, 10° tilt
- ☐ **FLC20** Flat Lens Clear, 20° tilt
- ☐ **FLF** Flat Lens Frosted
- ☐ **FLF5**[11] Flat Lens Frosted, 5° axial
- ☐ **FLCAS** Flat Lens Clear, Anti-Slip
- ☐ **CLC** Convex Lens, Clear
- ☐ **CLF** Convex Lens, Frosted

Accessories

Internal[12]

- ☐ **IHL** Honeycomb Louver
- ☐ **ISS**[13] Source Shield
- ☐ **LSF** Linear Spread Filter
- ☐ **CFAMB** Color Filter Amber
- ☐ **CFBLU** Color Filter Blue
- ☐ **CFGRN** Color Filter Green
- ☐ **CFRED** Color Filter Red
- ☐ **WWL** Wall Wash Louver

External[12, 14]

- ☐ **GS** Glare Shield
- ☐ **LC** Lexan Cover
- ☐ **LS** Light Shield
- ☐ **RG**[15] Rock Guard

Trims[12, 14]

- ☐ **BTR** Bronze Round
- ☐ **BTS** Bronze Square
- ☐ **STR** Stainless Round
- ☐ **STS** Stainless Square

Lamp

- ☐ **LP** Lamp Installed

Finish[20]

- ☐ **BL** Black
- ☐ **BZ** Bronze
- ☐ **DDB** Dark Bronze
- ☐ **DNA** Natural Alum.
- ☐ **GN** Green
- ☐ **GR** Gray
- ☐ **SND** Sand
- ☐ **STG** Steel Gray
- ☐ **TVG** Terra Verde Green
- ☐ **WH** White
- ☐ **CF** Custom Finish

M9400 Series Assembly consists of the following individual component parts:
MRIS94 Rough-In Housing
MFS94 Finishing Section
MACS Lamp Module
MHSL94 Ballast Module

***Required Entries**

Notes:

1. Not Available with M9440 square model.
2. Incandescent models available with 120 Volt only.
3. Lamps available with GEB or MLEBAD electronic MVOLT (120V-277V) ballast only.
4. Available for Low Voltage lamps only. Remote 12V power supply required (sold separately).
5. MVOLT is standard on all Fluorescent lamps and MH lamps with GEB or MLEBAD ballast option.
6. Not all distributions are valid with all lamp types, consult lamp manufacturers' specifications.
7. WWD distribution available with T4 G8.5 base MH, T4 mini-can base Incandescent, or Fluorescent lamps only.
8. ASY distribution available with Fluorescent lamps only.
9. Specify top lens. Bottom lens is FLC standard.
10. FLC5 lens standard with WWD distribution using Fluorescent lamps.
11. FLF5 lens standard with WWD distribution using MH or incandescent lamps.
12. Accessories are mutually exclusive, choose one only.
13. ISS available with T6 and T4 lamps only. Not available with WWD distribution.
14. Accessory not available with SS door material.
15. Not available with CLC or CLF convex lens.
16. SF available with 120, 277 or 347 supply voltages on HID fixtures only.
17. DF available with 208, 220 or 240 supply voltages on HID fixtures only.
18. Ballast options available with MH lamps only.
19. 0-10 Volt remote analog powered dimmer system with additional supply wiring required (by others).
20. Door material finish is natural cast aluminum (A) or cast bronze (B) unless specified. Stainless steel (SS) door available with brushed finish standard.
21. Default conduit entry.
22. Not available with T4 or T6 lamps.

Hydrel is an ISO 9001 Certified Manufacturer

9/6/07
M9420_M9440_REV3

12881 Bradley Ave.
Sylmar, CA 91342
Phone: 818-362-9465
Fax: 818-362-6548
www.hydrel.com

HYDREL
An Acuity Brands Company

SUITABLE FOR WET LOCATIONS IP68

M9420/9440 ORDERING INFORMATION

50 Hz Application
Choose the boldface catalog nomenclature that best suits your needs.

PART NO.

M9420	SS	70CMT6	23050HZ	NSP	FLC10	16B	ISS		LP	IEC

Model*

- ☐ **M9420** Round
- ☐ **M9440** Square

Material*

- ☐ **A** Aluminum
- ☐ **B** Bronze
- ☐ **ASP**[1] Alum. Stainless Perf.
- ☐ **BBP**[1] Bronze Bronze Perf.
- ☐ **BSP**[1] Bronze Stainless Perf.
- ☐ **SS** Stainless Steel

Voltage*

- ☐ **12**[3]
- ☐ **22050HZ**
- ☐ **23050HZ**
- ☐ **24050HZ**
- ☐ **MVOLT**[4]

Conduit Entries

- ☐ **16B**[18] PG16 bottom
- ☐ **16S** PG16 side
- ☐ **20S** 20mm side
- ☐ **20B** 20mm bottom
- ☐ **25B** 25mm bottom

Options

Ballasting[14]

- ☐ **GEB** Electronic Ballast
- ☐ **MLEBAD**[15] Analog Dimming Ballast

Listing

- ☐ **IEC** International Electronic Commission

Lamp Type*

Low Voltage

- ☐ **M50** MR16 GX5.3 base
- ☐ **M75** MR16 GX5.3 base
- ☐ **P3650ILV** PAR36 screw terminal base
- ☐ **P3675ILV** PAR36 screw terminal base

Incandescent

- ☐ **P2050I** PAR20 E27 base
- ☐ **P3050I** PAR30 E27 base
- ☐ **P3075I** PAR30 E27 base
- ☐ **100Q** TUB B15d

Fluorescent

- ☐ **18TRT** Triple Tube GX24q2 base
- ☐ **26TRT** Triple Tube GX24q3 base
- ☐ **32TRT** Triple Tube GX24q3 base

MH

- ☐ **20CMT4**[2] T4 G8.5 base
- ☐ **35CMT4**[2] T4 G8.5 base
- ☐ **35CMT6** T6 G-12 base
- ☐ **70CMT4** T4 G8.5 base
- ☐ **70CMT6** T6 G-12 base
- ☐ **P2035CM** PAR20 E27 base
- ☐ **P3035CM** PAR30 E27 base
- ☐ **P3070CM** PAR30 E27 base

Distribution[5]*

- ☐ **NSP** Narrow Spot
- ☐ **SP**[17] Spot
- ☐ **NFL**[17] Narrow Flood
- ☐ **MFL** Medium Flood
- ☐ **FL**[17] Flood
- ☐ **WFL**[17] Wide Flood
- ☐ **WWD**[6] Wall Wash Distribution
- ☐ **ASY**[7,17] Asymmetric

Lens[8]*

- ☐ **FLC** Flat Lens Clear
- ☐ **FLC5**[9] Flat Lens Clear, 5° axial
- ☐ **FLC10** Flat Lens Clear, 10° tilt
- ☐ **FLC20** Flat Lens Clear, 20° tilt
- ☐ **FLF** Flat Lens Frosted
- ☐ **FLF5**[10] Flat Lens Frosted, 5° axial
- ☐ **FLCAS** Flat Lens Clear, Anti-Slip
- ☐ **CLC** Convex Lens, Clear
- ☐ **CLF** Convex Lens, Frosted

Accessories

Internal[11]

- ☐ **IHL** Honeycomb Louver
- ☐ **ISS**[12] Source Shield
- ☐ **LSF** Linear Spread Filter
- ☐ **WWL** Wall Wash Louver
- ☐ **CFAMB** Color Filter Amber
- ☐ **CFBLU** Color Filter Blue
- ☐ **CFGRN** Color Filter Green
- ☐ **CFRED** Color Filter Red

External[11, 13]

- ☐ **GS** Glare Shield
- ☐ **LC** Lexan Cover
- ☐ **LS** Light Shield
- ☐ **RG** Rock Guard

Trims[11, 13]

- ☐ **BTR** Bronze Round
- ☐ **BTS** Bronze Square
- ☐ **STR** Stainless Round
- ☐ **STS** Stainless Square

Lamp

- ☐ **LP** Lamp included

Finishes[16]

- ☐ **BL** Black
- ☐ **BZ** Bronze
- ☐ **DDB** Dark Bronze
- ☐ **DNA** Natural Alum.
- ☐ **GN** Green
- ☐ **GR** Gray
- ☐ **SND** Sand
- ☐ **STG** Steel Gray
- ☐ **TVG** Terra Verde Green
- ☐ **WH** White
- ☐ **CF** Custom Finish

***Required Entries**

M9400 Series Assembly consists of the following individual component parts:
MRIS94 Rough-In Housing
MFS94 Finishing Section
MACS Lamp Module
MHSL94 Ballast Module

Notes:

1. Not Available with M9440 square model.
2. Lamps available with GEB or MLEBAD electronic , MVOLT (120V-277V 50/60 HZ) ballast only.
3. Available for Low Voltage lamps only. Remote 12V power supply required (sold separately).
4. MVOLT is standard on all Fluorescent lamps and MH lamps with GEB or MLEBAD ballast option.
5. Not all distributions are valid with all lamp types, consult lamp manufacturers' specifications.
6. WWD distribution available with T4 G8.5 base MH, 100Q B15d base Incandescent, or Fluorescent lamps only.
7. ASY distribution available with Fluorescent lamps only.
8. Specify top lens. Bottom lens is FLC standard.
9. FLC5 lens standard with WWD distribution using Fluorescent Lamps.
10. FLF5 lens standard with WWD distribution using MH or incandescent lamps.
11. Accessories are mutually exclusive, choose one only.
12. ISS available with T6, and T4 lamps only. Not available with WWD distribution.
13. Accessory not available with SS door material.
14. Ballast options available with HID lamps only.
15. 0-10 Volt remote analog powered dimmer system with additional supply wiring required (by others).
16. Door material finish is natural cast aluminum (A) or cast bronze (B) unless specified. Stainless steel (SS) door available with brushed finish standard.
17. Not available with T4 or T6 lamps.
18. Default conduit entry.

Hydrel is an ISO 9001 Certified Manufacturer

9/6/07
M9420_M9440_REV3

12881 Bradley Ave.
Sylmar, CA 91342
Phone: 818-362-9465
Fax: 818-362-6548
www.hydrel.com

7.1 Hurdles to Implementation of Lighting Masterplan

This Masterplan presents opportunities to improve the campus appearance, function, and save an enormous amount of energy and utility costs. However, there are many difficulties of which decision-makers must be aware.

Electrical costs and metering
The Uptown Campus currently purchases power from the Harriman State Building Campus. The University's share of the power bill has been negotiated; it is NOT based on actual use. Because there is no separate metering for the University campus, no one really knows how much electric power is used, nor how much is used for lighting separate from other uses. With the exception of a couple of campus buildings, there is no sub-metering of individual buildings. All of this means that no one takes ownership for the electrical use on campus, nor can anyone appropriately take CREDIT for energy reductions. Without knowledge of the baseline lighting electrical use for each building, it is impossible to provide accurate incentives for energy savings. If the facilities group recommends improvements that use more efficient, more expensive lamps and fixtures, then it would make sense for the Facilities and Maintenance groups to recover some of the energy savings to help pay for on-going maintenance costs and conversions.

The current electric rates are approximately 10.5c/kWh during daytime hours (approximately 6am to 6pm) and 9.5c/kWh at night. These evening rates are surprisingly high for the hours when power is much more plentiful. Ideally, the University should renegotiate its electric rates with National Grid, separately from the Harriman Campus that has little nighttime load. A Time-of-Use Metering System would provide an incentive for the University to shift electrical loads to the evening hours whenever possible, and would provide a significant break in cost for doing so.

This will also be a great benefit in the near future when electric vehicles are prevalent. Campus vehicles can then be charged at night when electricity is inexpensive. This will reduce pollution and reliance on fossil fuels for transportation.

Getting the recommended lighting equipment installed properly
Some lighting changes have already been specified and implemented on the campus. Unfortunately, the lighting did not get installed as specified because the Facilities Group charged with the work made their own decisions on what was reasonable in cost, appropriate in appearance, easy to order, and easy to maintain. The consequence can be equipment that is stylistically inappropriate, produces too much or too little light, is glaring, or uses more than twice the designed Watts. For the campus to have a consistent quality in appearance and durability of equipment, it is important that the specifications for light fixtures, ballasts, lamps, wiring, sensors, etc. be strictly followed.

The University must make a commitment to a procedure that the Facilities and Planning Office will follow so that the correct equipment and lighting layouts are specified, priced, ordered, received, installed, commissioned, and maintained.

Getting fair pricing for the specified equipment
Some of the Facilities Staff have been reluctant to use the newer lamps and equipment because they immediately say it is too expensive.

Keeping the historic elements and other lighting systems in good working order
This includes changing the dumb lamps!!

Low-hanging fruit

Compromise required
The University at Albany Administration must help guide the recommendations of the Lighting Masterplan. The goals of Historic Appearance, Energy and Sustainability, Cost of the recommended changes, Perceived Safety, Maintained Cost of the lighting system, and the Image of the Campuses do conflict. Determining the direction for parking and roadway lighting, vs. podium plaza lighting, for example, may mean setting a priority of historical preservation or reconstruction for one area, and a priority of lowest long-term maintenance for another.