MAHICAN / ZIMAHC
BLDG. # 51C
SECOND FLOOR
REV. OF 12/76

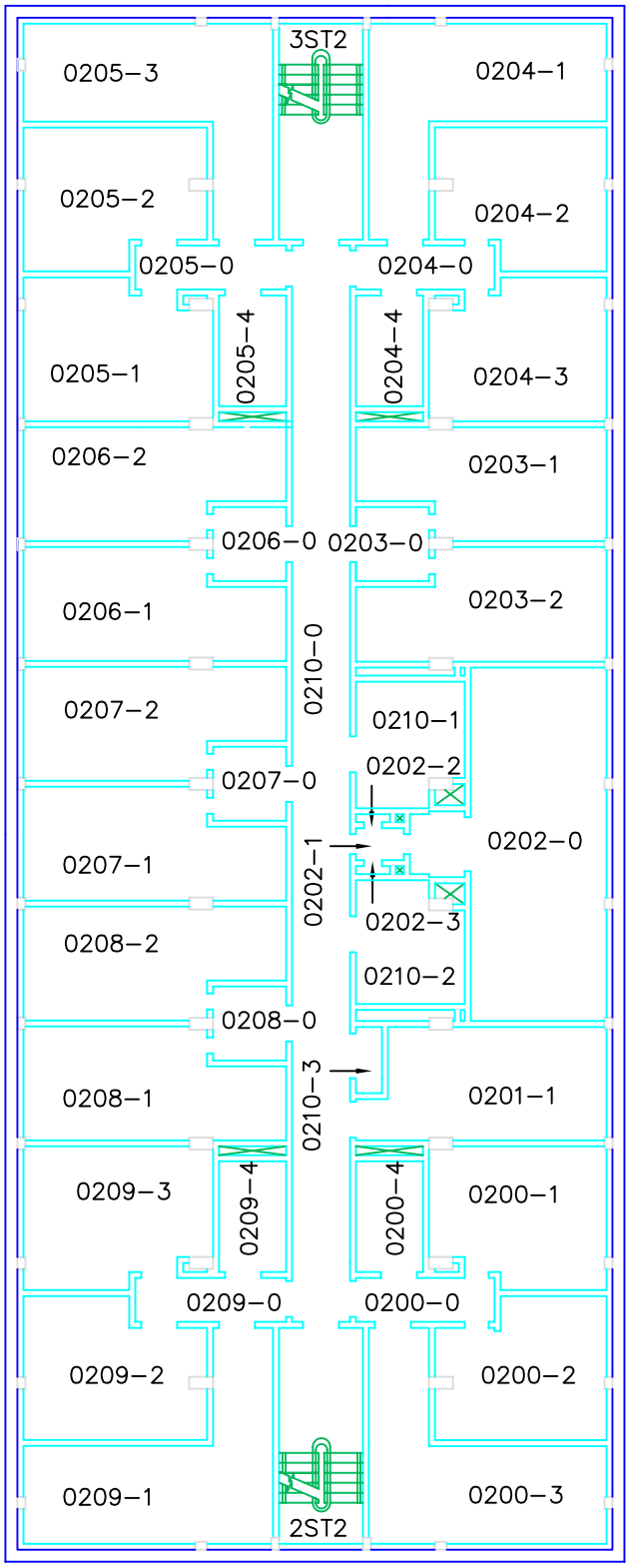

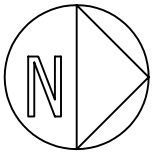

SCALE:1/16 = 1'-0"

LOG 293