Resistance and DC Circuits

Chapter 27

HW05 is up on WebAssign, due Thursday 02/22

Direct Current

When the current in a circuit has a constant direction, the current is called ***direct current.***

- Most of the circuits analyzed will be assumed to be in *steady state*, with constant magnitude and direction.

Because the potential difference between the terminals of a battery is constant, the battery produces direct current.

The battery is known as a source of electromotive force (emf).

Electromotive Force

The electromotive force (emf), ε, of a battery is the maximum possible voltage that the battery can provide between its terminals.

- The emf supplies energy, **it does not apply a force.**

The battery will normally be the source of energy in the circuit.

The positive terminal of the battery is at a higher potential than the negative terminal.

We consider the wires to have no resistance (they do have resistance but it is negligible).

Internal Battery Resistance

If the internal resistance is zero, the terminal voltage equals the emf.

In a real battery, there is internal resistance, *r.*

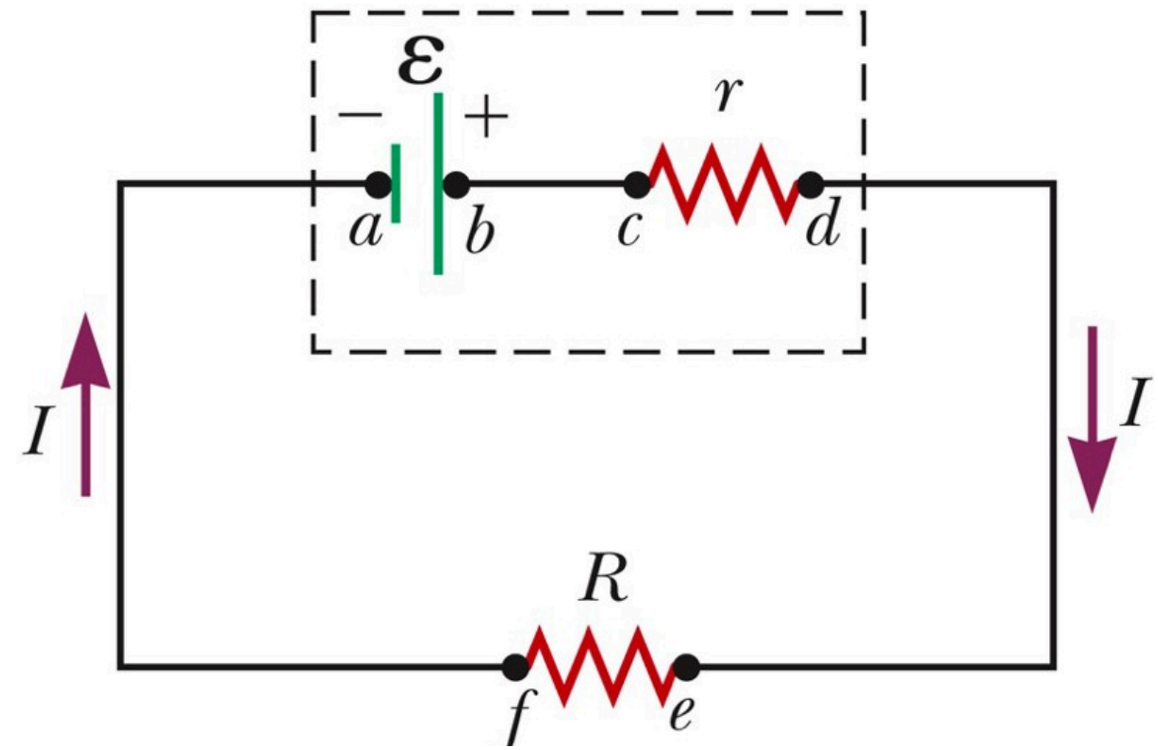

The terminal voltage is:

$$\boxed{\Delta V = \varepsilon - Ir}$$

$$\varepsilon = IR + Ir$$

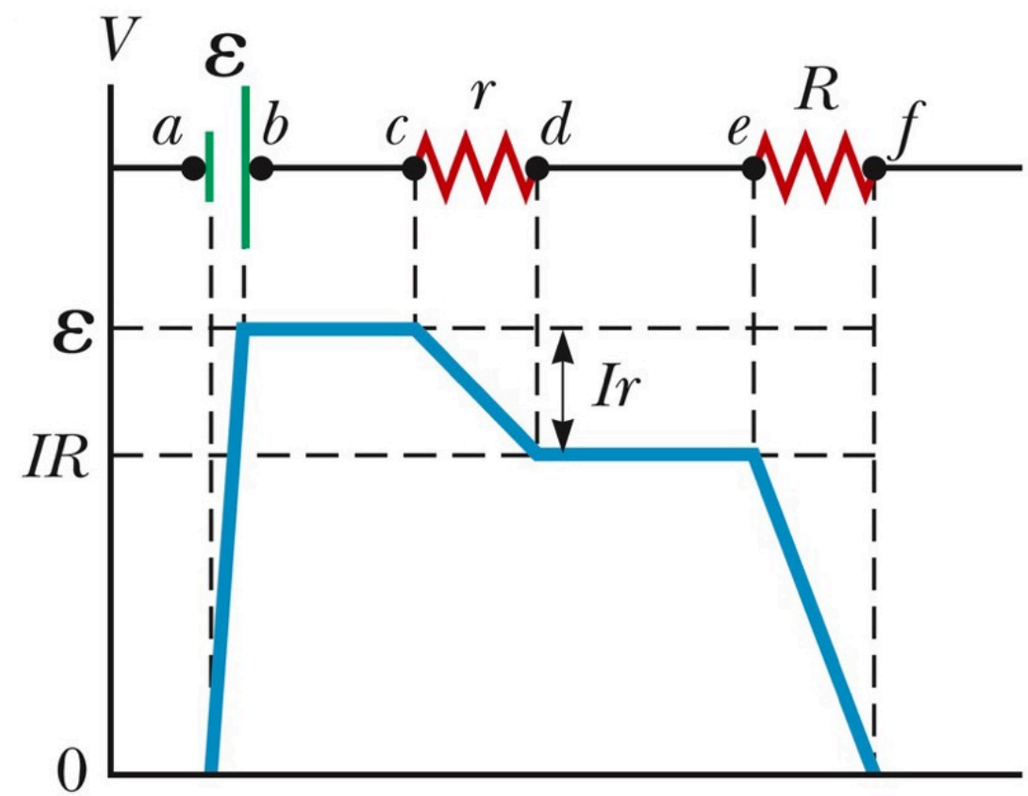

The emf is equivalent to the *open-circuit* voltage.

- This is the terminal voltage when no current is in the circuit.
- This is the voltage labeled on the battery.

The actual potential difference between the terminals of the battery depends on the current in the circuit.

Load Resistance

The terminal voltage also equals the voltage across the external resistance.

- This external resistor is called the *load resistance.*
- In the previous circuit, the load resistance is just the external resistor.
- In general, the load resistance could be any electrical device.
  - These resistances represent *loads* on the battery since it supplies the energy to operate the device containing the resistance.

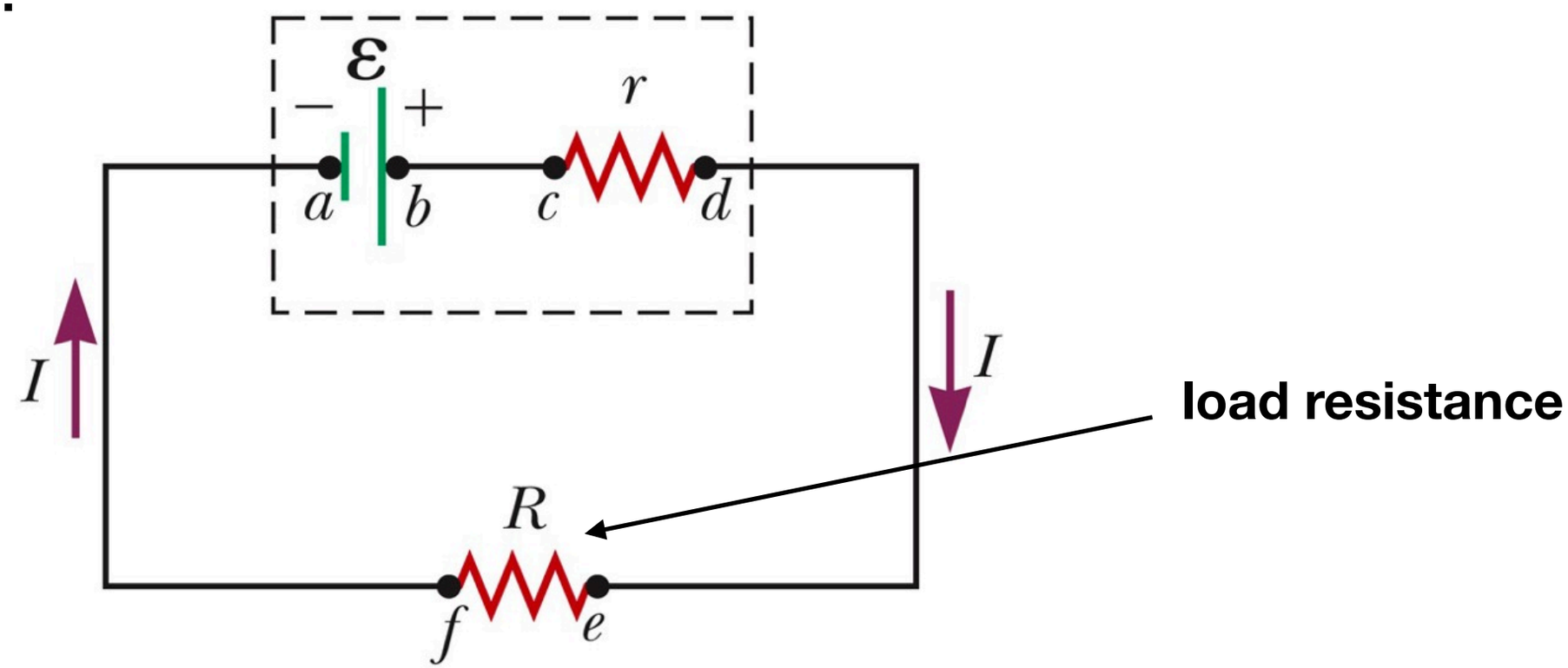

Power

The total power output of the battery is

$$\boxed{P = I\,\varepsilon}$$

$$\varepsilon = IR + Ir$$

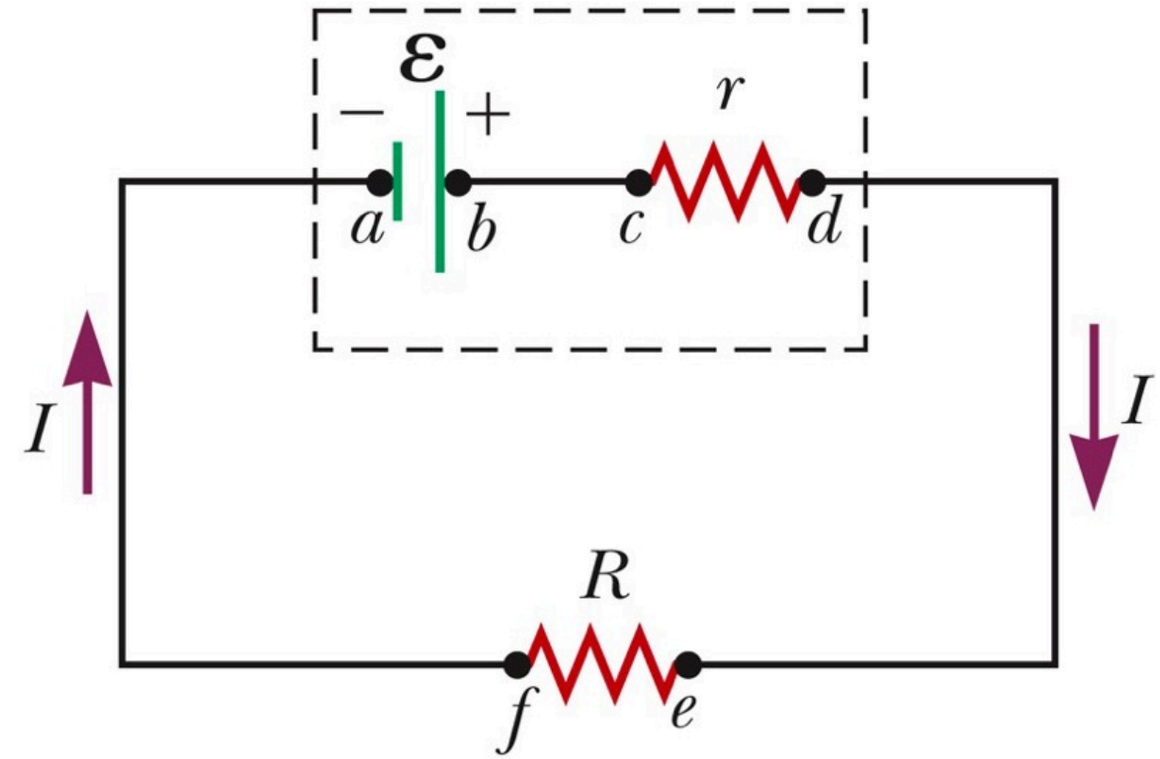

This power is delivered to the external resistor ($I^2 R$) and to the internal resistor ($I^2 r$).

$$\boxed{P = I^2 R + I^2 r}$$

$$\boxed{P = I\,\Delta V = I^2 R = \frac{(\Delta V)^2}{R}}$$

The battery is a supply of constant emf.

- The battery does not supply a constant current since the current in the circuit depends on the resistance connected to the battery.
- The battery does not supply a constant terminal voltage.

Example Problem #3

1. M A battery has an emf of 15.0 V. The terminal voltage of the battery is 11.6 V when it is delivering 20.0 W of power to an external load resistor R. (a) What is the value of R? (b) What is the internal resistance of the battery?

Example Problem #3: Solution

(a) Combining Joule's law, $P = I\Delta V$, and the definition of resistance, $\Delta V = IR$, gives

$$R = \frac{(\Delta V)^2}{P} = \frac{(11.6\ \text{V})^2}{20.0\ \text{W}} = \boxed{6.73\ \Omega}$$

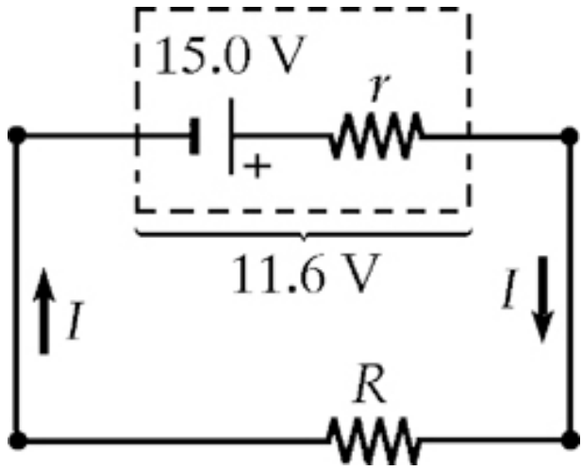

ANS. FIG. P28.1

(b) The electromotive force of the battery must equal the voltage drops across the resistances: $\mathcal{E} = IR + Ir$, where $I = \Delta V / R$.

$$r = \frac{(\mathcal{E} - IR)}{I} = \frac{(\mathcal{E} - \Delta V)R}{\Delta V}$$

$$= \frac{(15.0\ \text{V} - 11.6\ \text{V})(6.73\ \Omega)}{11.6\ \text{V}} = \boxed{1.97\ \Omega}$$

Kirchhoff's Rules

There are ways in which resistors can be connected so that **the circuits formed cannot be reduced to a single equivalent resistor.**

Two rules, called **Kirchhoff's rules**, can be used instead.

You can also use Kirchhoff's rules when you can calculate an equivalent resistance.

Prints & Photographs Division, Library of Congress, LC-USZ62-133715

Gustav Kirchhoff

Kirchhoff's Junction Rule

- **The sum of the currents at any junction must equal zero.**
  - Currents directed into the junction are entered into the equation as +I and those leaving as -I.
  - A statement of Conservation of Charge

The amount of charge flowing out of the branches on the right must equal the amount flowing into the single branch on the left.

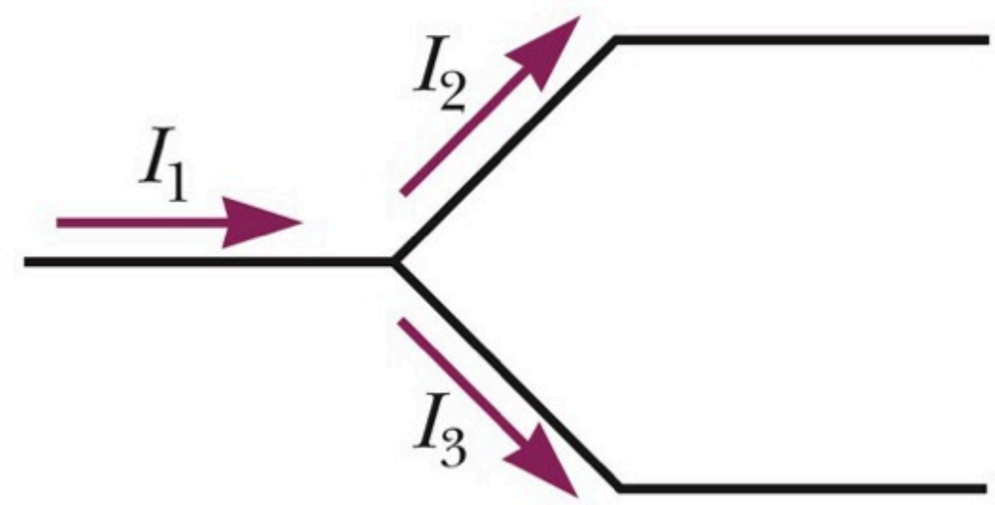

$$\sum_{junction} I = 0$$

$I_1 - I_2 - I_3 = 0$

Kirchhoff's Loop Rule

- **The sum of the potential differences across all elements around any closed circuit loop must be zero.**
  - A statement of Conservation of Energy

$$\sum_{\text{closed loop}} \Delta V = 0$$

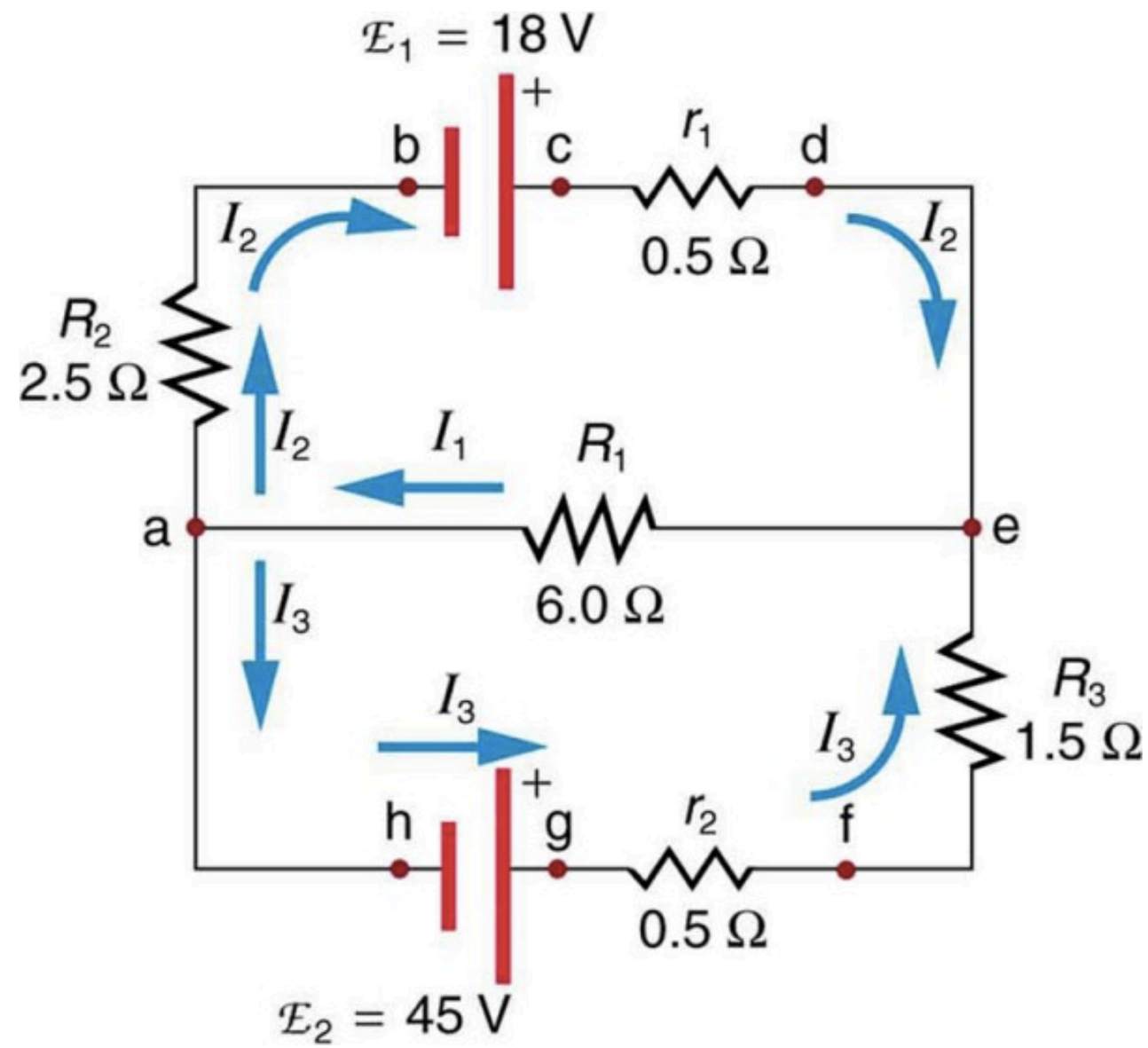

Loop Rule

Traveling around the loop from *a* to *b*
In (a), the resistor is traversed in the direction of the current, the potential across the resistor is – *IR:* ***voltage drop***
In (b), the resistor is traversed in the direction opposite of the current, the potential across the resistor is + *IR:* ***voltage rise***

In each diagram, $\Delta V = V_b - V_a$ and the circuit element is traversed from *a* to *b*, left to right.

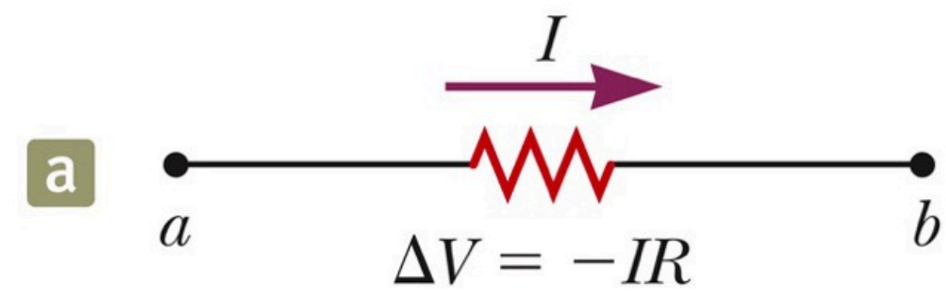

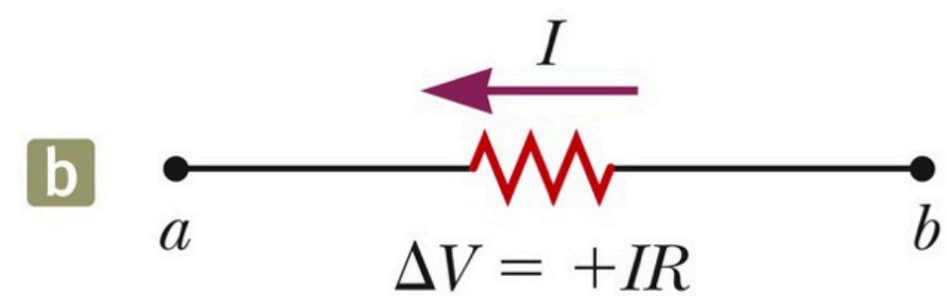

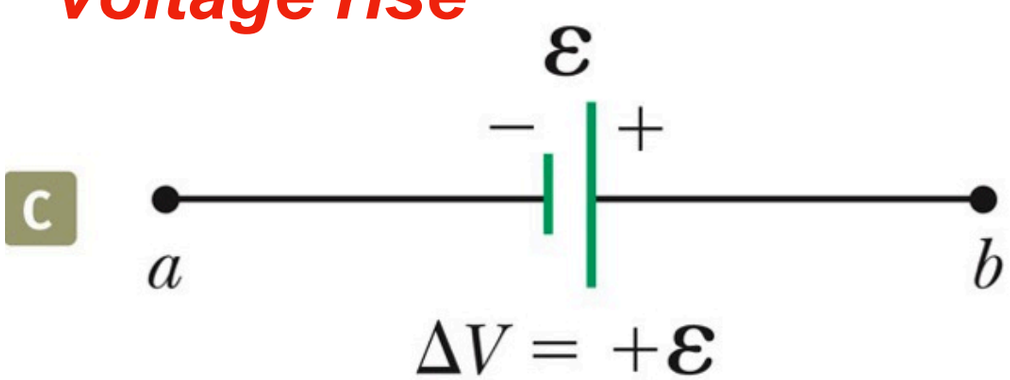

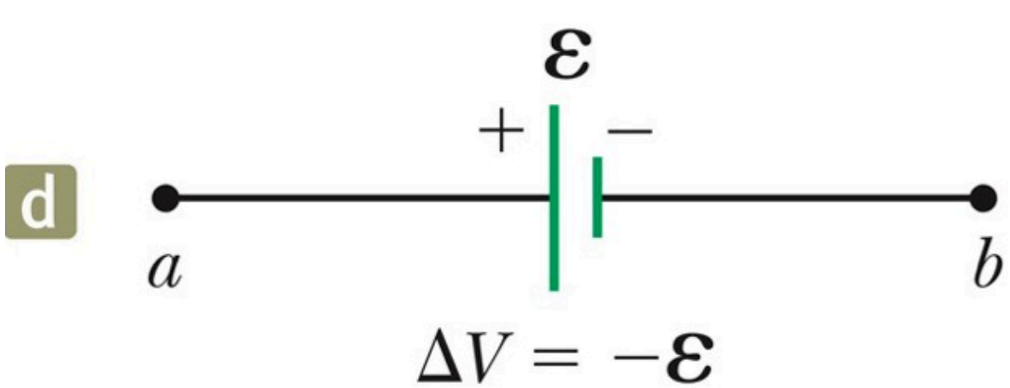

In (c), the source of emf is traversed in the direction of the emf (from – to +), and the change in the potential difference is +ε.
In (d), the source of emf is traversed in the direction opposite of the emf (from + to -), and the change in the potential difference is -ε.

Equations from Kirchhoff's Rules

Use the junction rule as often as needed, so long as each time you write an equation, you include in it a current that has not been used in a previous junction rule equation.

- In general, the number of times the junction rule can be used is one fewer than the number of junction points in the circuit.

The loop rule can be used as often as needed so long as a new circuit element (resistor or battery) or a new current appears in each new equation.

In order to solve a particular circuit problem, the number of independent equations you need to obtain from the two rules equals the number of unknown currents.

Any capacitor acts as an open branch in a circuit.

- The **current** in the branch containing the capacitor is **zero** under steady-state conditions. Steady state means long term conditions, so once the capacitor is fully charged.

Applying Kirchhoff's rules: strategy

Consider the following circuit. The goal is to find all currents and all potentials across all circuit elements.

$R_1 = 1\Omega$, $R_2 = 2\Omega$ and $R_3 = 3\Omega$

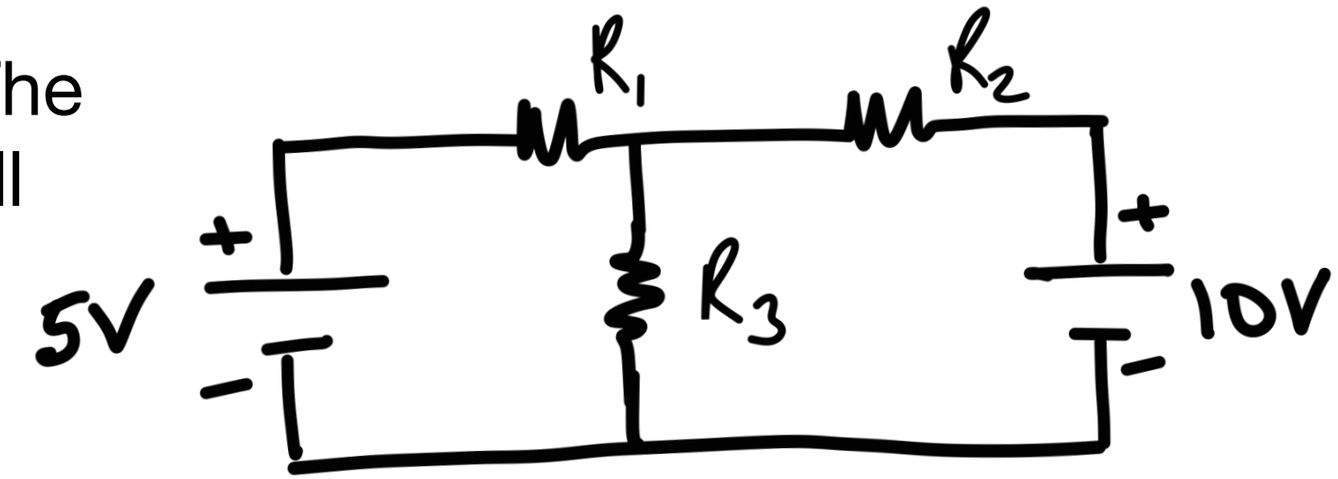

1. Label all the currents through all elements of your circuit:

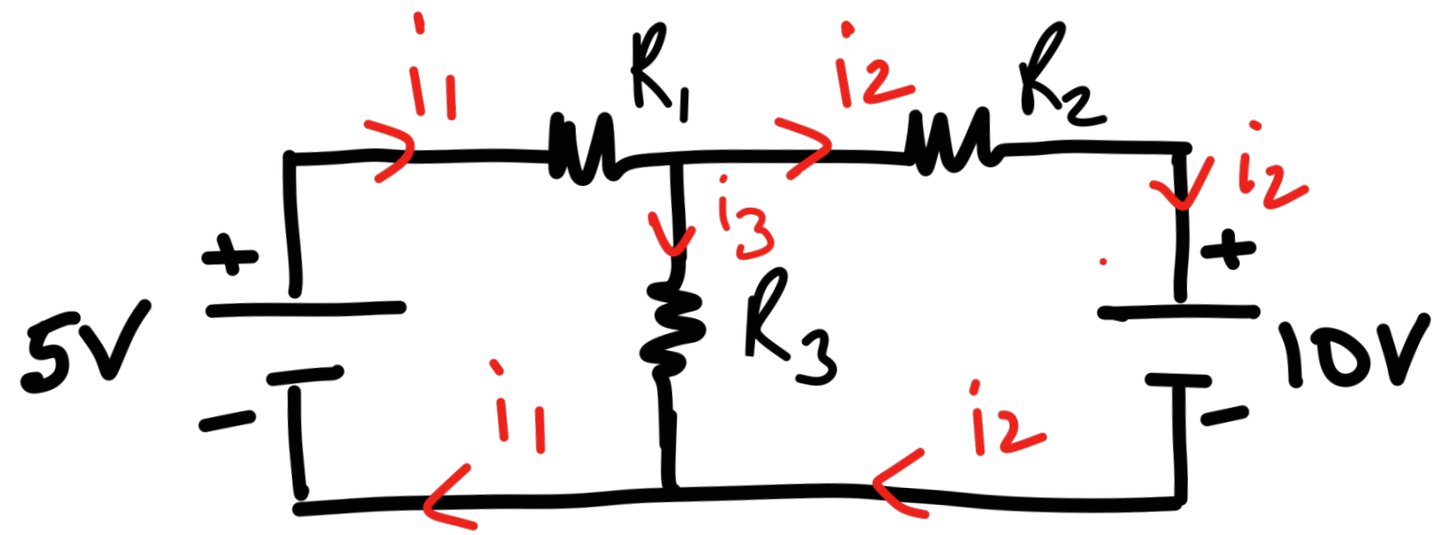

2. Label all your potentials across all elements:

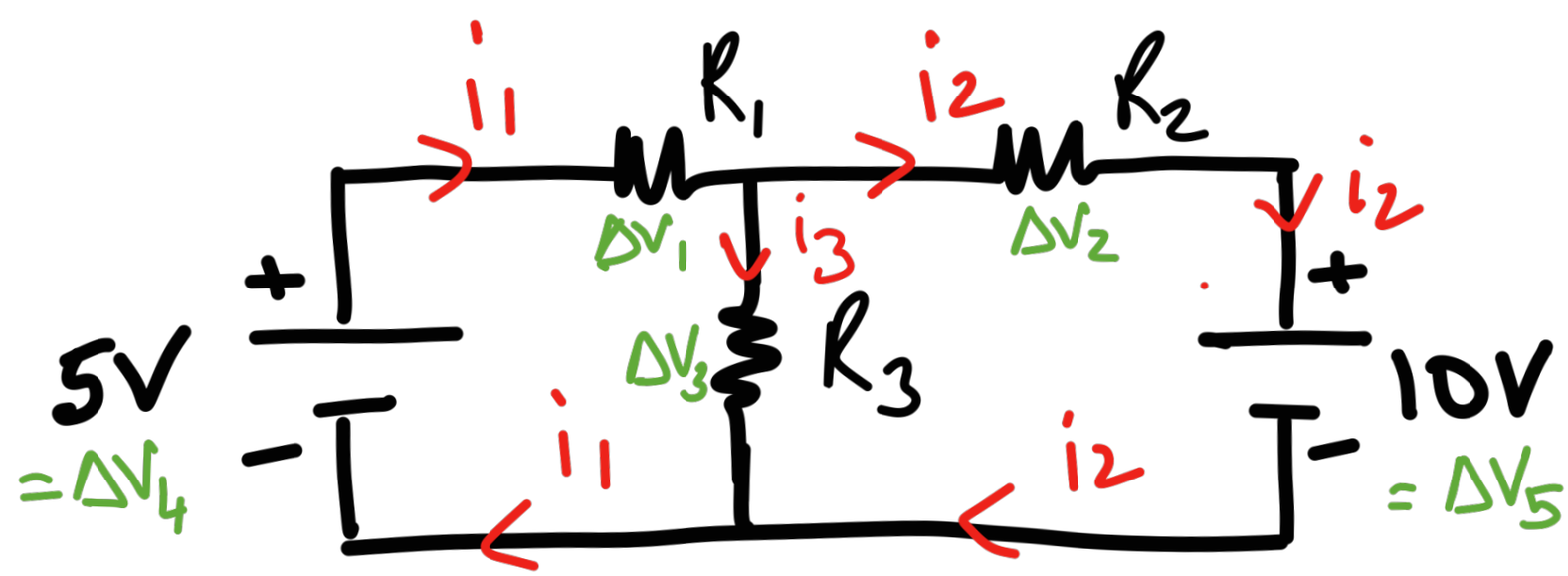

Applying Kirchhoff's rules: strategy

3. Choose the direction of your loops: Remember your loops represent the direction of your potential.

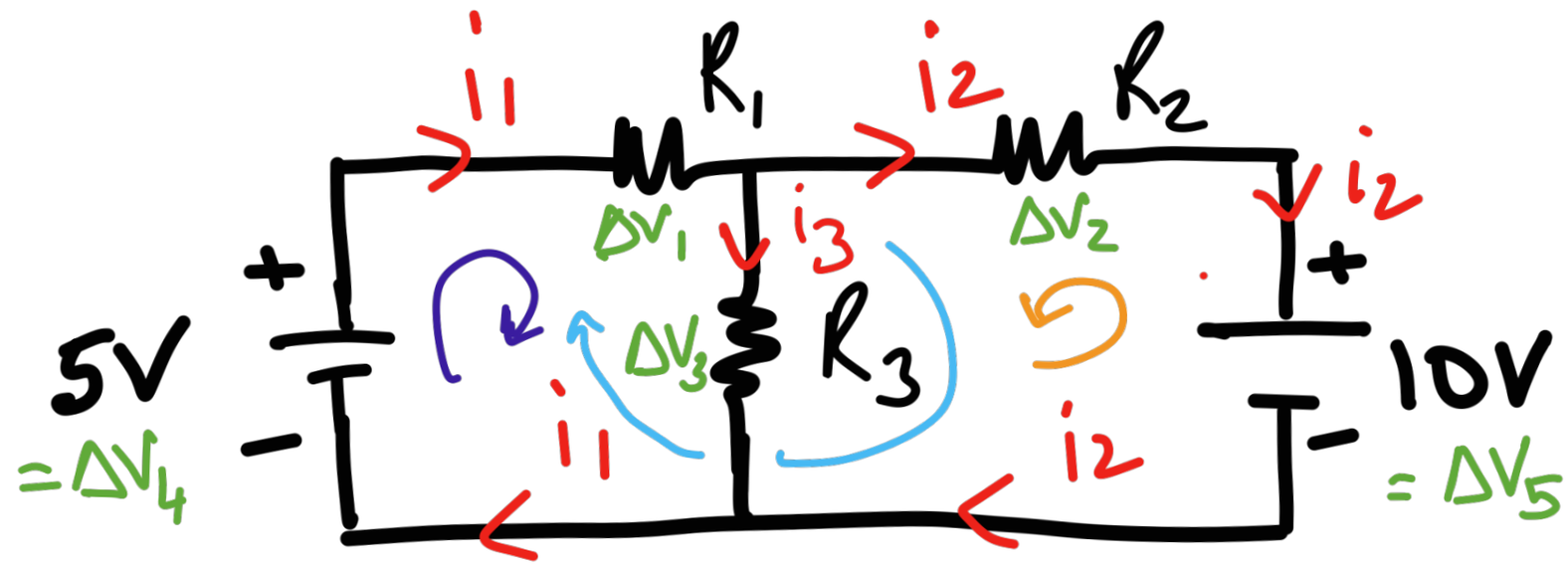

4. Remember conventions:

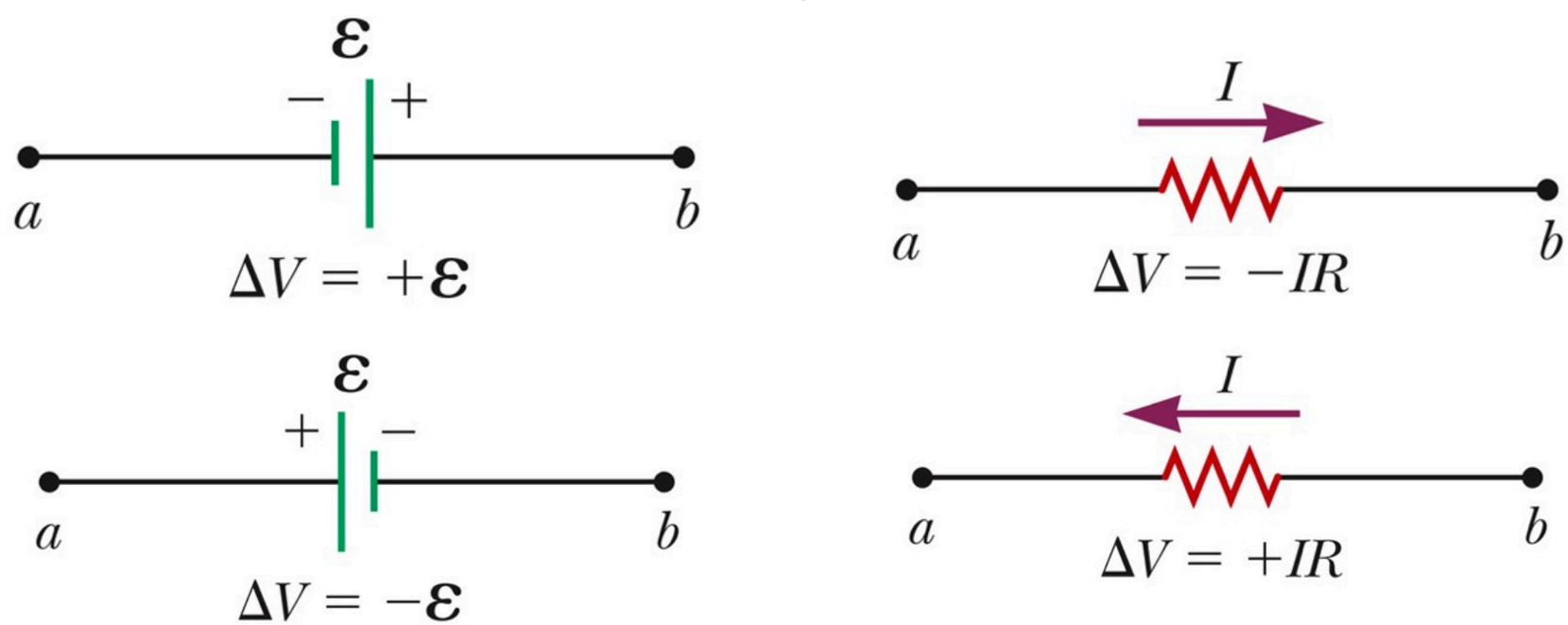

5. Write each equation for each loop (all 3 loops shown for completion, you just need 2,):

$5 - \Delta V_1 - \Delta V_3 = 0$

$5 - i_1R_1 - i_3R_3 = 0$

$5 - 1i_1 - 3i_3 = 0$

$10 + \Delta V_2 - \Delta V_3 = 0$

$10 + i_2R_2 - i_3R_3 = 0$

$10 + 2i_2 - 3i_3 = 0$

$5 - \Delta V_1 - \Delta V_2 - 10 = 0$

$-5 - i_1R_1 - i_2R_2 = 0$

$-5 - 1i_1 - 2i_2 = 0$

Applying Kirchhoff's rules: strategy

6. Write your equations for the junctions: $i_1 = i_2 + i_3$

7. Solve the equations for one current. $R_1 = 1\Omega$, $R_2 = 2\Omega$ and $R_3 = 3\Omega$

$5 - \Delta V_1 - \Delta V_3 = 0$
$5 - i_1R_1 - i_3R_3 = 0$ ①
$5 - i_1 - 3i_3 = 0$

$10 + \Delta V_2 - \Delta V_3 = 0$
$10 + i_2R_2 - i_3R_3 = 0$ ②
$10 + 2i_2 - 3i_3 = 0$

$i_1 = i_2 + i_3$ ③

a) Use equation 3 to express equation 1 in terms of i_2 and i_3

$5 - i_1 - 3i_3 = 5 - (i_2 + i_3) - 3i_3 = 0$
$5 - i_2 - 4i_3 = 0$

b) You now have 2 equations and 2 unknowns :

$5 - i_2 - 4i_3=0$ $\quad$ $10 + 2i_2 - 3i_3 = 0$

c) Use equation 1 (or 2) to express i_2 (or i_3) as a function of i_3 (or i_2):

$i_2 = 5 - 4i_3$

d) Substitute your result in c) into equation 2. You now have one unknown one equation, you can solve for i_2.

$10 + 2i_2 - 3i_3 = 10 + 2(5 - 4i_3) - 3i_3 = 0$
$10 + 10 - 8i_3 - 3i_3 = 10 + 10 - 11i_3 = 0$
$20 - 11i_3 = 0$
$i_3 = 20/11 = 1.82$ A

Applying Kirchhoff's rules: strategy

8. Now that you have one current, you can find all the others.

$i_2 = 5 - 4i_3$
$i_2 = 5 - 4x1.82$
$i_2 = -2.28$ A

$i_1 = i_2 + i_3$
$i_1 = -2.28 + 1.82$
$i_1 = -0.46$ A

9. Now that you have all the currents, you can find all the potentials.

$\Delta V_1 = R_1 i_1$
$\Delta V_1 = 1 \times -0.46$
$\Delta V_1 = -0.46$ V

$\Delta V_2 = R_2 i_2$
$\Delta V_2 = 2 \times -2.28$
$\Delta V_2 = -4.56$ V

$\Delta V_3 = R_3 i_3$
$\Delta V_3 = 3 \times 1.82$
$\Delta V_3 = 5.46$ V

10. Check that your results fit your remaining equations

$-5 - \Delta V_1 - \Delta V_2 = -5 - (-0.46) - (-4.56) = 0$

11. Understand your results:

i_1, i_2 , ΔV_1 and ΔV_2 are negative, which means the currents i_1 and i_2 go in opposite direction to how we drew them.

Example Problem #6

The ammeter reads 2.00 A.
Find I_1 , I_2 ,and the emf.

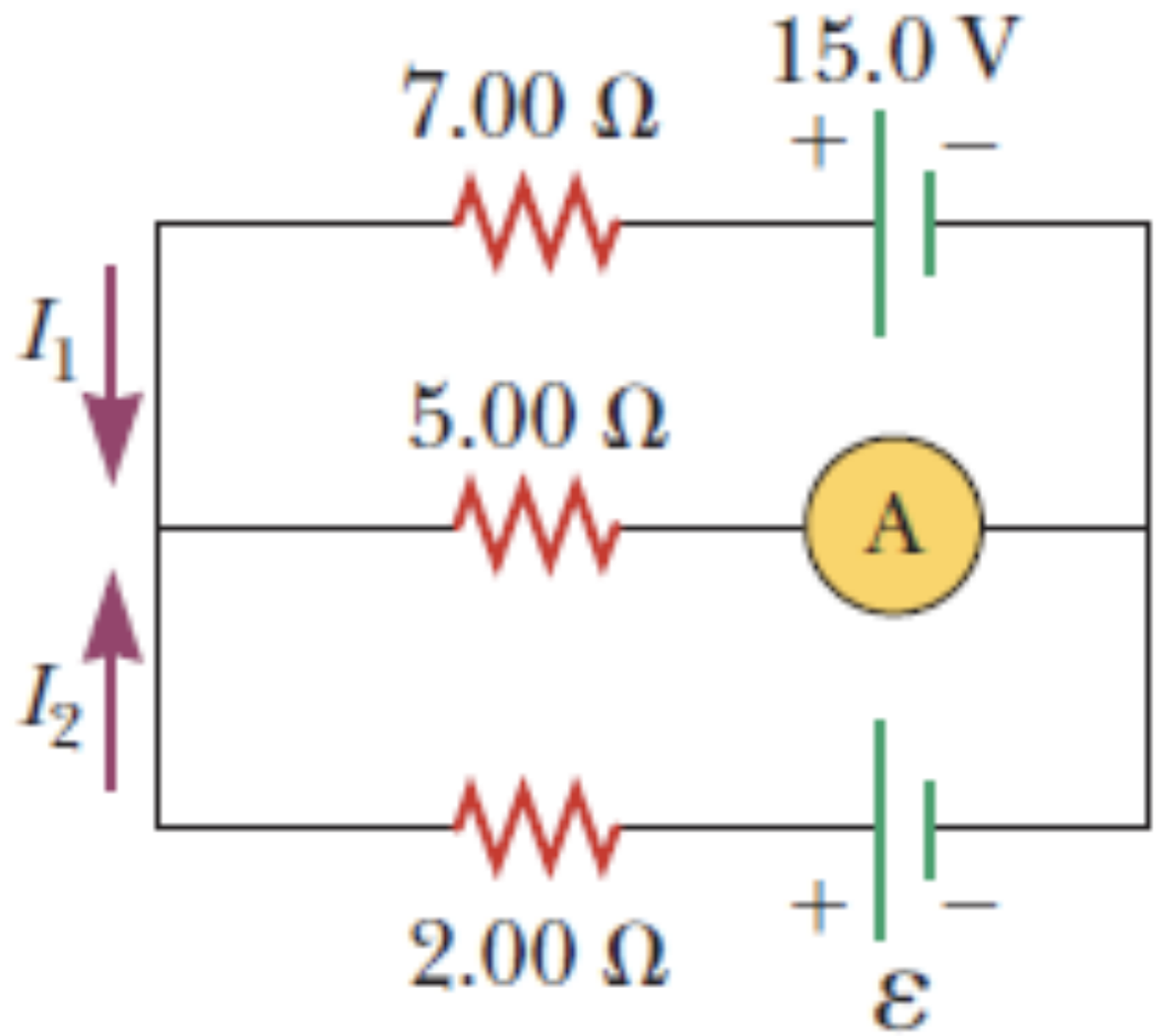

Example Problem #6: Solution

(a) For the upper loop:

$$+15.0\text{ V} - (7.00\ \Omega)I_1 - (2.00\text{ A})(5.00\ \Omega) = 0$$

$$5.00 = 7.00I_1 \quad \text{so} \quad \boxed{I_1 = 0.714\text{ A}}$$

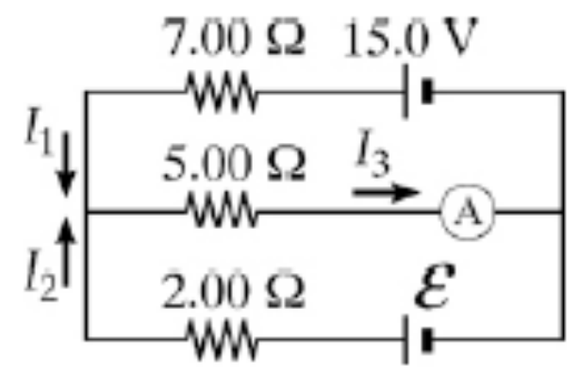

ANS. FIG. P28.29

(b) For the center-left junction:

$$I_3 = I_1 + I_2 = 2.00\text{ A}$$

where I_3 is the current through the ammeter (assumed to travel to the right):

$$0.714 + I_2 = 2.00 \quad \text{so} \quad \boxed{I_2 = 1.29\text{ A}}$$

(c) For the lower loop:

$$+\mathcal{E} - (2.00\ \Omega)(1.29\text{ A}) - (5.00\ \Omega)(2.00\text{ A}) = 0 \rightarrow \boxed{\mathcal{E} = 12.6\text{ V}}$$

Example Problem #7

34. Kirchoff's rules.
Obtain equations for:

a) the upper loop
b) the lower loop
c) the junction on the left side
d) solve the junction equation for I_3
e) using part d, eliminate I_3 from the equation of part b
f) solve the equations of parts a and e to find I_1 and I_2
g) substitute the answers of part f in the equation of part d and solve for I_3
h) what is the significance of the negative answer for I_2?

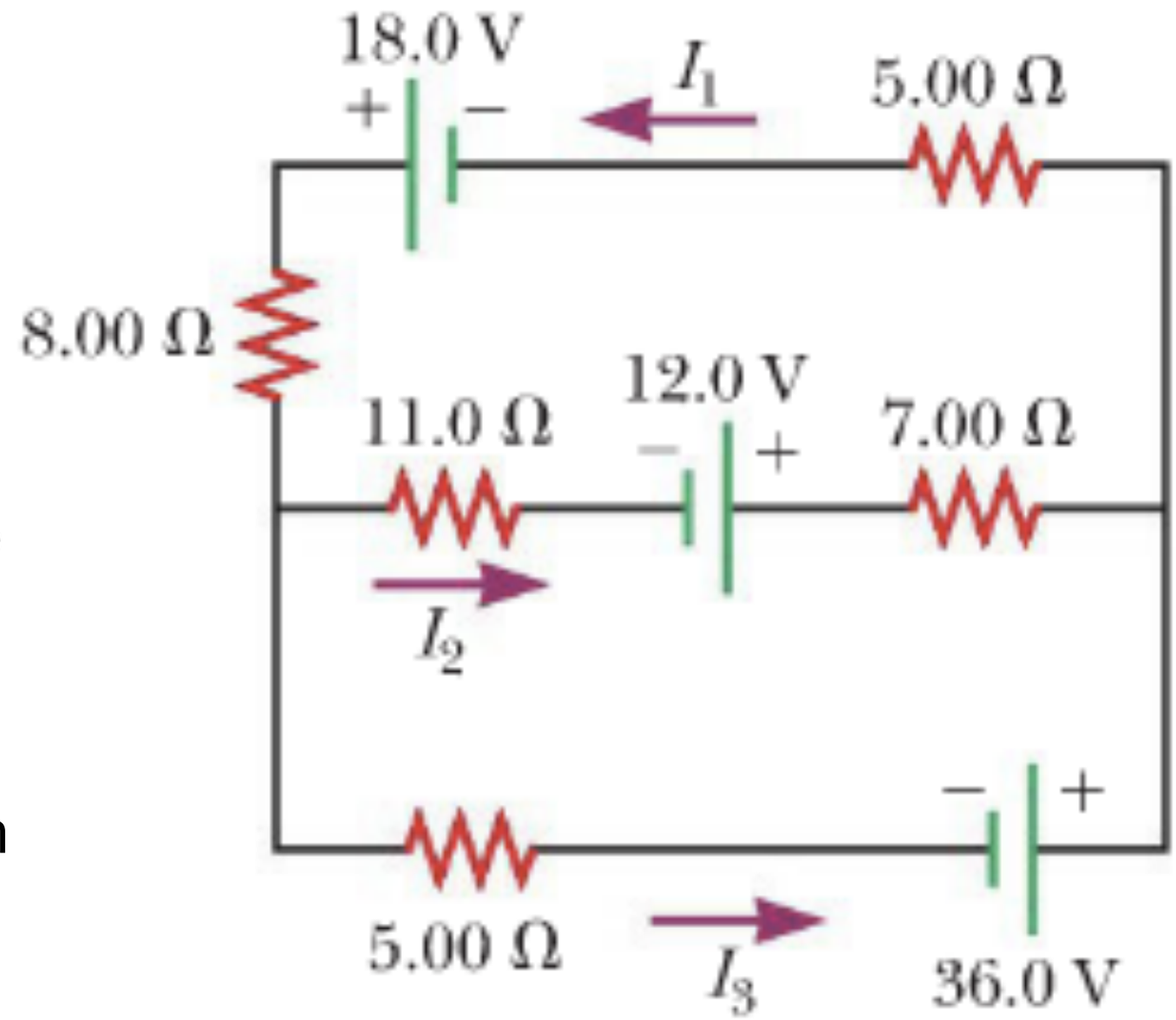

Example Problem #7: Solution

(a) Going counterclockwise around the upper loop and suppressing units, Kirchhoff's loop rule gives

$$-11.0I_2 + 12.0 - 7.00I_2 - 5.00I_1 + 18.0 - 8.00I_1 = 0$$

or $\boxed{13.0I_1 + 18.0I_2 = 30.0}$. **[1]**

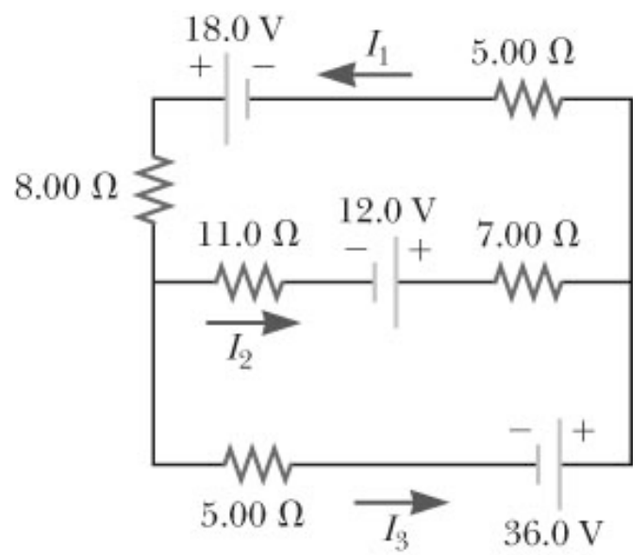

ANS. FIG. P28.34

(b) Going counterclockwise around the lower loop:

$$-5.00I_3 + 36.0 + 7.00I_2 - 12.0 + 11.0I_2 = 0$$

or $\boxed{18.0I_2 - 5.00I_3 = -24.0}$. **[2]**

(c) Applying the junction rule at the node in the left end of the circuit gives $\boxed{I_1 - I_2 - I_3 = 0}$ **[3]**

(d) Solving equation [3] for I_3 yields $\boxed{I_3 = I_1 - I_2}$ **[4]**

Example Problem #7: Solution

(e) Substituting equation [4] into [2] gives

$$5.00\left(I_1 - I_2\right) - 18.0I_2 = 24.0$$

or $\boxed{5.00I_1 - 23.0I_2 = 24.0}$.

(f) Solving equation [5] for I_1 yields $I_1 = \left(24.0 + 23.0I_2\right)/5$.
Substituting this into equation [1] gives

$$13.0I_1 + 18.0I_2 = 30.0$$

$$13.0\frac{\left(24.0 + 23.0I_2\right)}{5.00} + 18.0I_2 = 30.0$$

$$13.0\left(24.0 + 23.0I_2\right) + 5.00\left(18.0I_2\right) = 5.00(30.0)$$

$$389I_2 = -162 \quad \rightarrow \quad I_2 = -162/389 \quad \rightarrow \quad \boxed{I_2 = -0.416\ \text{A}}$$

Then, from equation [2], $I_1 = \left(30 - 18I_2\right)/13$ which yields

$$\boxed{I_1 = 2.88\ \text{A}}$$

Example Problem #7: Solution

(g) Equation [4] gives

$$I_3 = I_1 - I_2 = 2.88\ \text{A} - (-0.416\ \text{A}) \quad \rightarrow \quad \boxed{I_3 = 3.30\ \text{A}}$$

(h) The negative sign in the answer for I_2 means that this current flows in the opposite direction to that shown in the circuit diagram and assumed during the solution. That is, the actual current in the middle branch of the circuit flows from right to left and has a magnitude of 0.416 A.

stop here?

RC Circuits

An RC circuit will contain a **series combination of a resistor and a capacitor.**

If there are more than one you can find the equivalent resistance and capacitance.

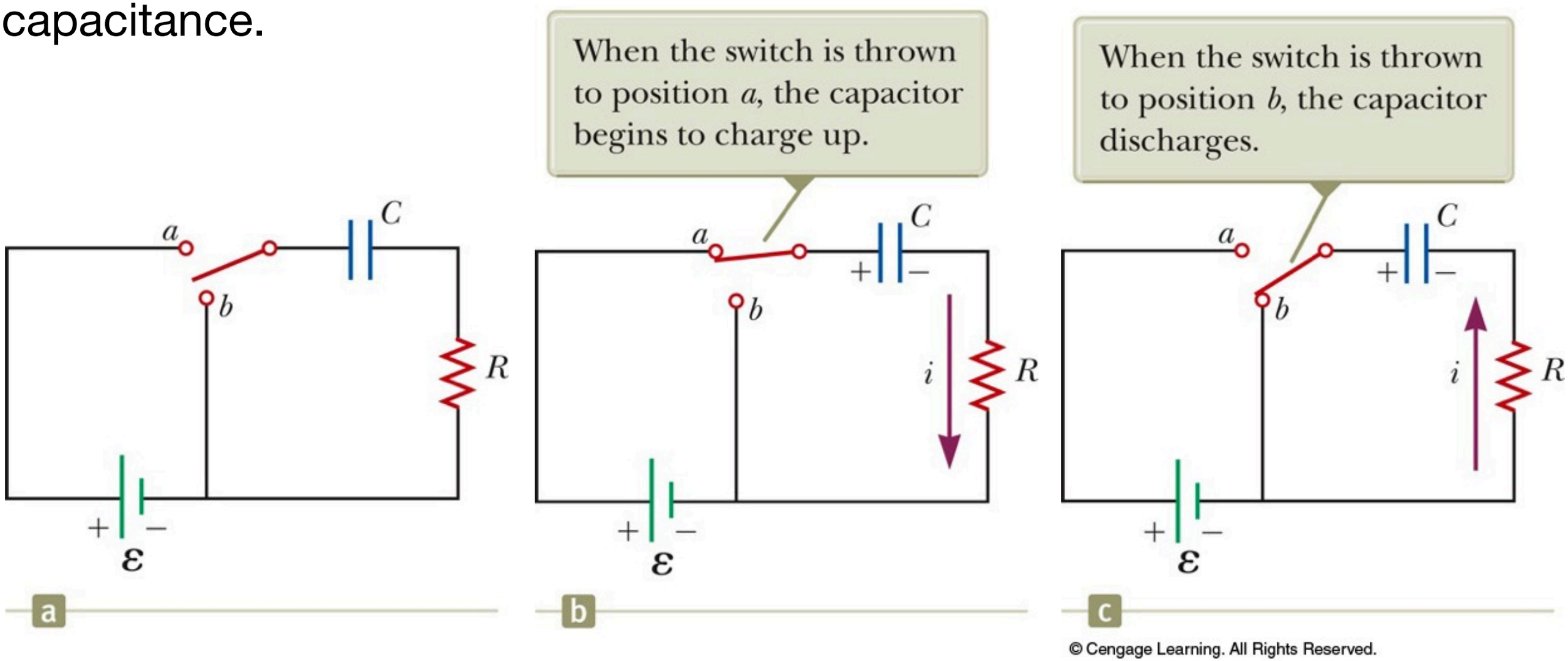

In direct current circuits containing capacitors, **the current may vary with time.**

- The current is still in the same direction.

Charging a Capacitor

At the instant the switch is closed, the charge on the capacitor is zero.

When the circuit is completed, the capacitor starts to charge.

The capacitor continues to charge until it reaches its **maximum charge ($Q = C\varepsilon$).**

Once the capacitor is **fully charged**, the current in the circuit is zero and the potential difference across the capacitor matches that supplied by the battery.

$$I = 0 \text{ and } \Delta V_C = \varepsilon$$

As the plates are being charged, the potential difference across the capacitor increases.

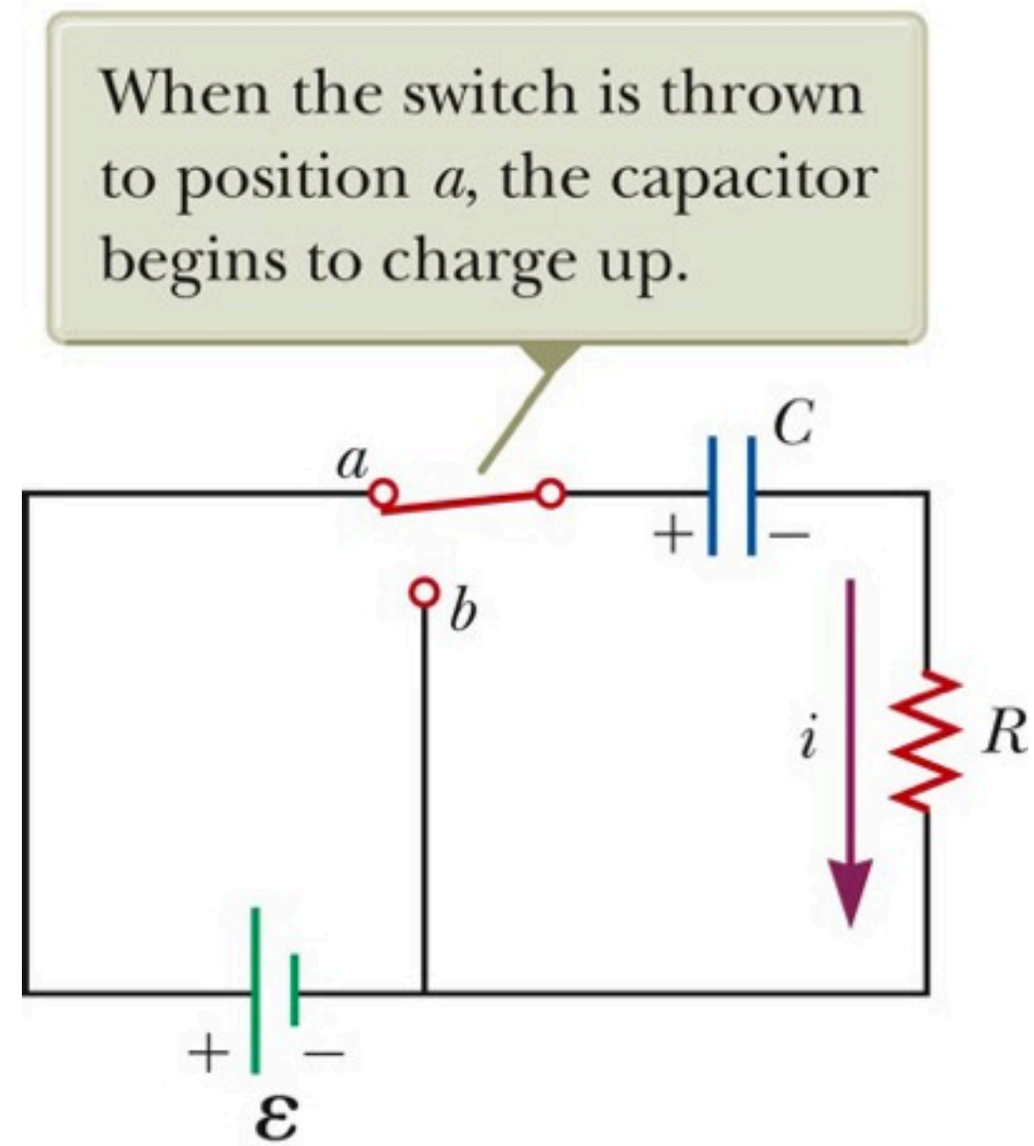

Charging a Capacitor in an RC Circuit

The charge on the capacitor varies with time

- $q(t) = C\varepsilon(1 - e^{-t/RC}) = Q(1 - e^{-t/RC})$

The current can be found

$$I(t) = \frac{dq}{dt} = +\frac{Q}{RC}e^{-t/RC}$$

$$I(t) = \frac{\varepsilon}{R}e^{-t/RC}$$

The time constant τ represents the time required for the charge to increase from zero to 63.2% of its maximum.

- $\tau = RC$

The energy stored in the charged capacitor is:

$$\tfrac{1}{2} Q\varepsilon = \tfrac{1}{2} C\varepsilon^2$$

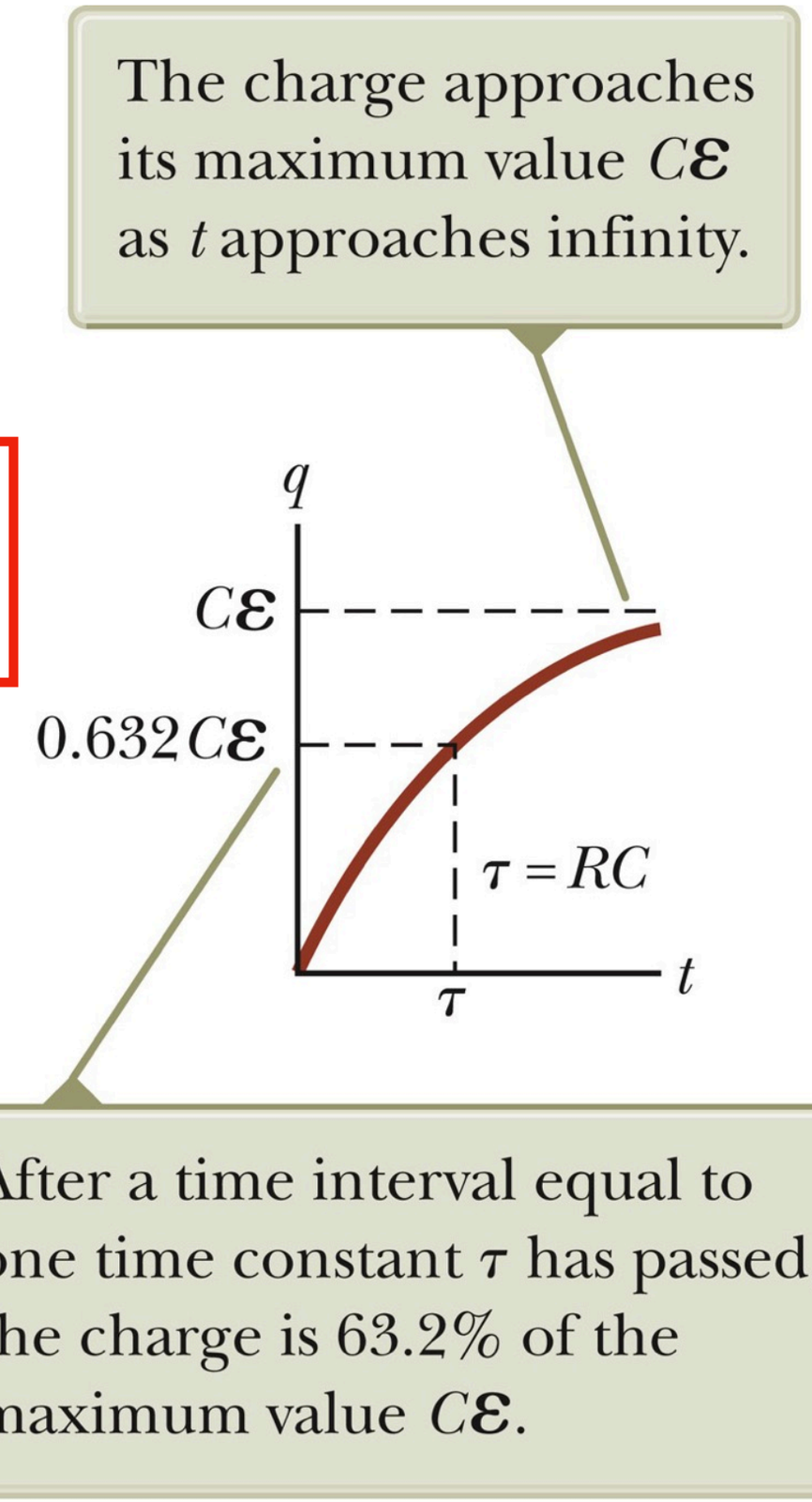

Discharging a Capacitor in an RC Circuit

When a charged capacitor is placed in the circuit, it can be discharged.

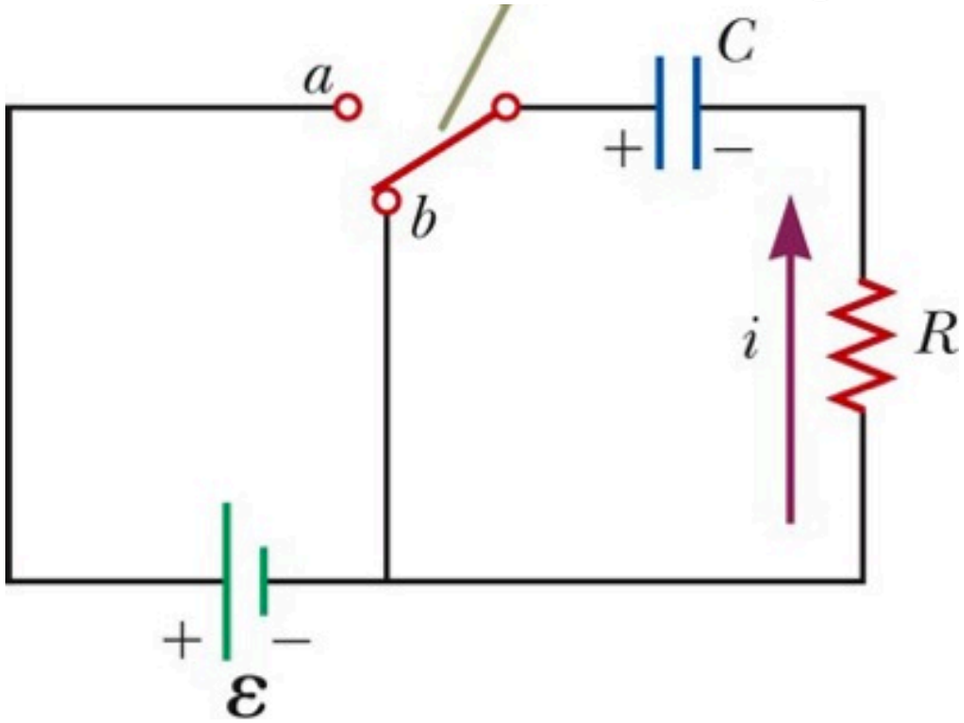

$$q(t) = Qe^{-t/RC}$$

At $t = \tau = RC$, the charge decreases to $0.368\ Q_{max}$

- In other words, in one time constant, the capacitor loses 63.2% of its initial charge.

The current is:

$$I(t) = -\frac{\epsilon}{R}e^{-t/RC}$$

Both charge and current decay exponentially at a rate characterized by $\tau = RC$.

The current has its maximum value $I_i = \mathcal{E}/R$ at $t = 0$ and decays to zero exponentially as t approaches infinity.

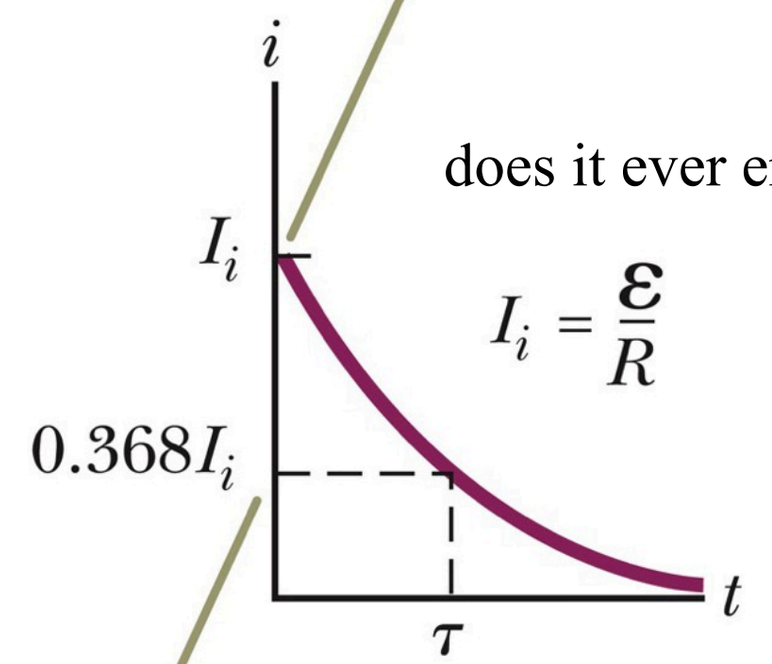

does it ever end?

After a time interval equal to one time constant τ has passed, the current is 36.8% of its initial value.

Household Wiring

The utility company distributes electric power to individual homes by a pair of wires. **Each house is connected in parallel with these wires.**
One wire is the “live wire” and the other wire is the neutral wire connected to ground.

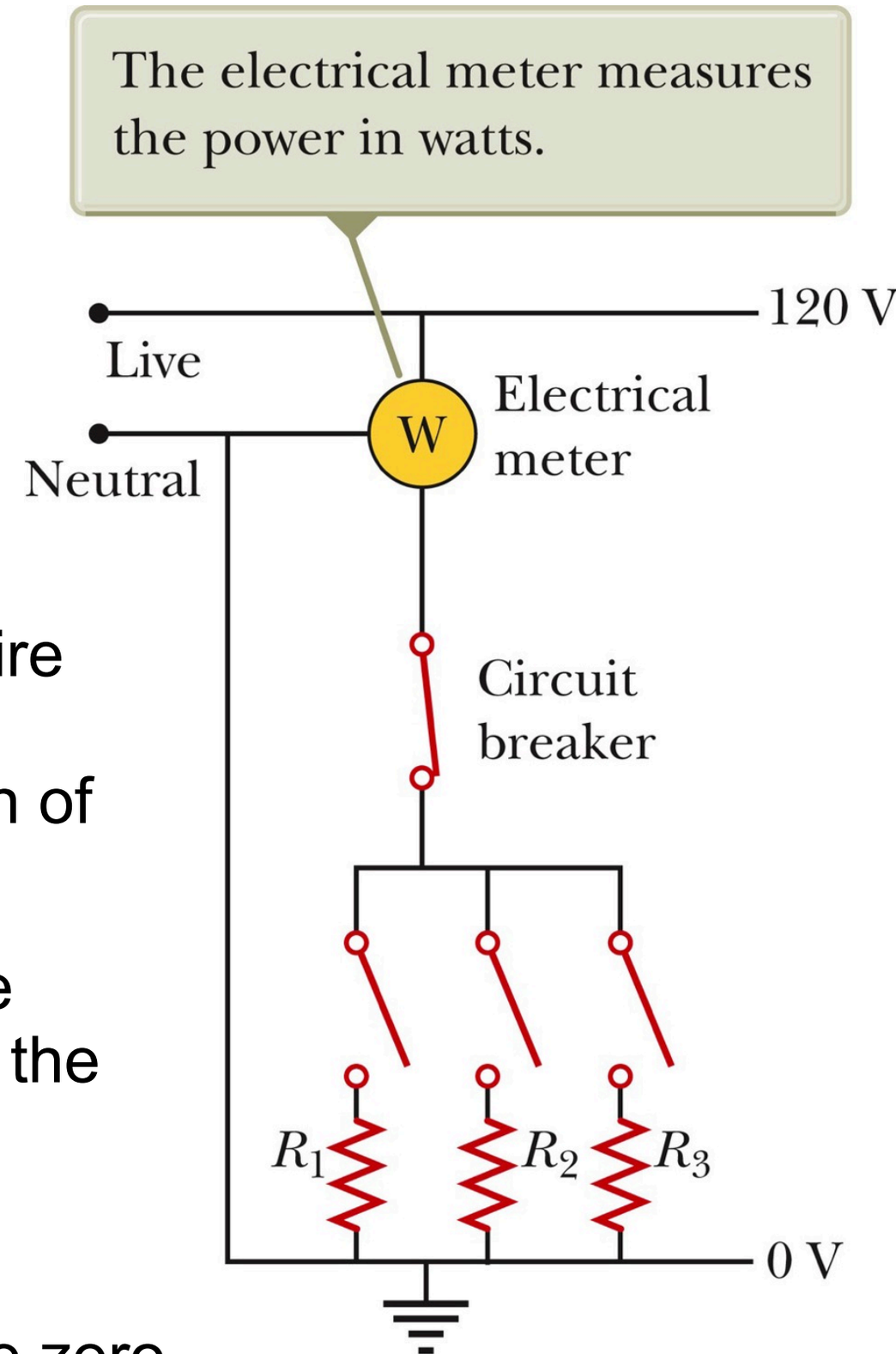

A meter is connected in series with the live wire entering the house.

- This records the household’s consumption of electricity.

After the meter, the wire splits so that multiple parallel circuits can be distributed throughout the house.

Each circuit has its own circuit breaker.

The potential of the neutral wire is taken to be zero.
The potential difference between the live and neutral wires is about 120 V.

A person in contact with ground can be electrocuted by touching the live wire.

Short Circuit

A *short circuit* occurs when almost zero resistance exists between two points at different potentials.

This results in a very large current V= RI !

In a household circuit, a circuit breaker will open the circuit in the case of an accidental short circuit.

- This prevents any damage

For example if you take the live wire (120V) and you connect it to ground (0V) without a load in between, you create a short circuit.

Ground Wire

Electrical equipment manufacturers use electrical cords that have a third wire, called a ground.

This safety ground normally carries no current and is both grounded and connected to the appliance.

If the live wire is accidentally shorted to the casing, most of the current takes the low-resistance path through the appliance to the ground.

If it was not properly grounded, anyone in contact with the appliance could be shocked because the body produces a low-resistance path to ground.

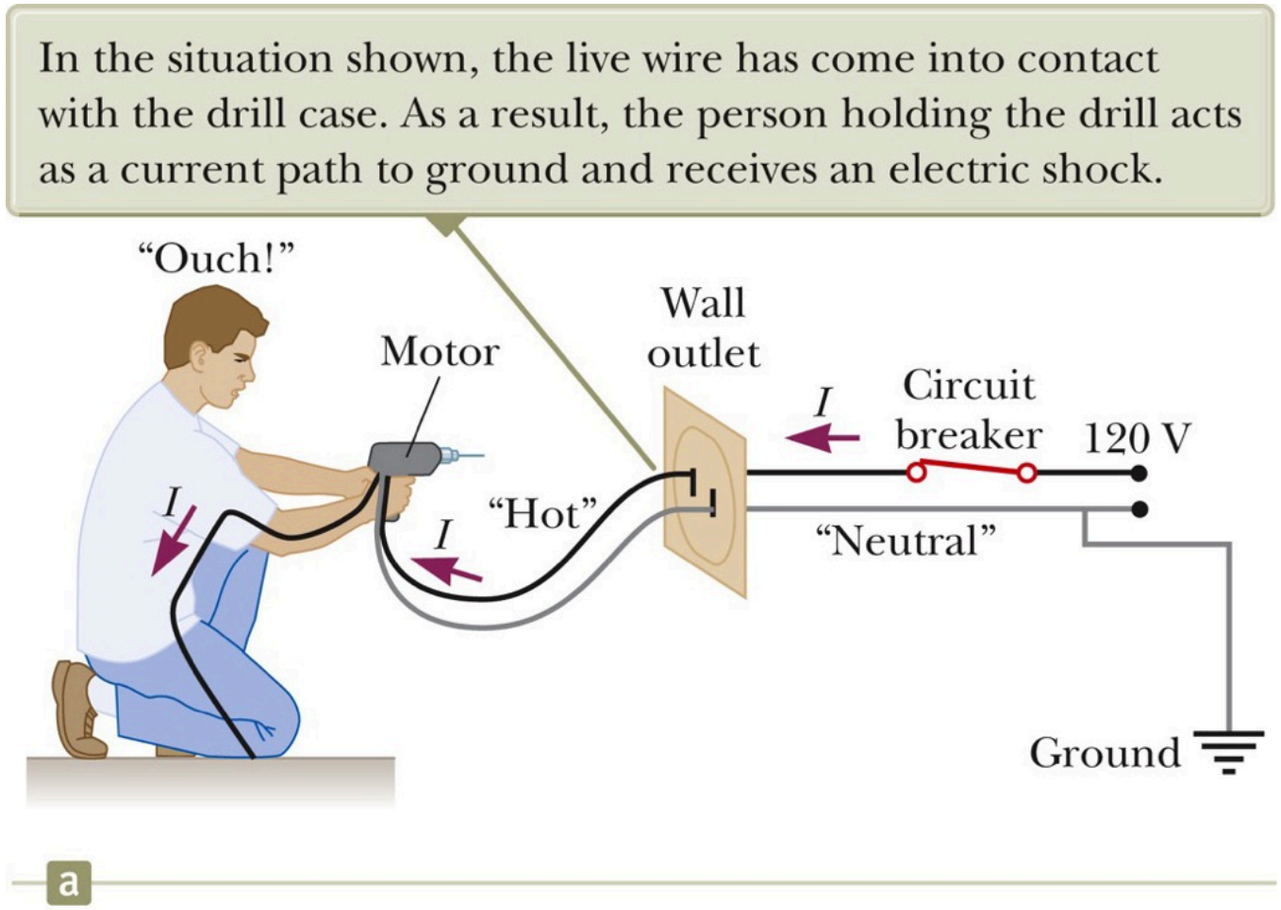

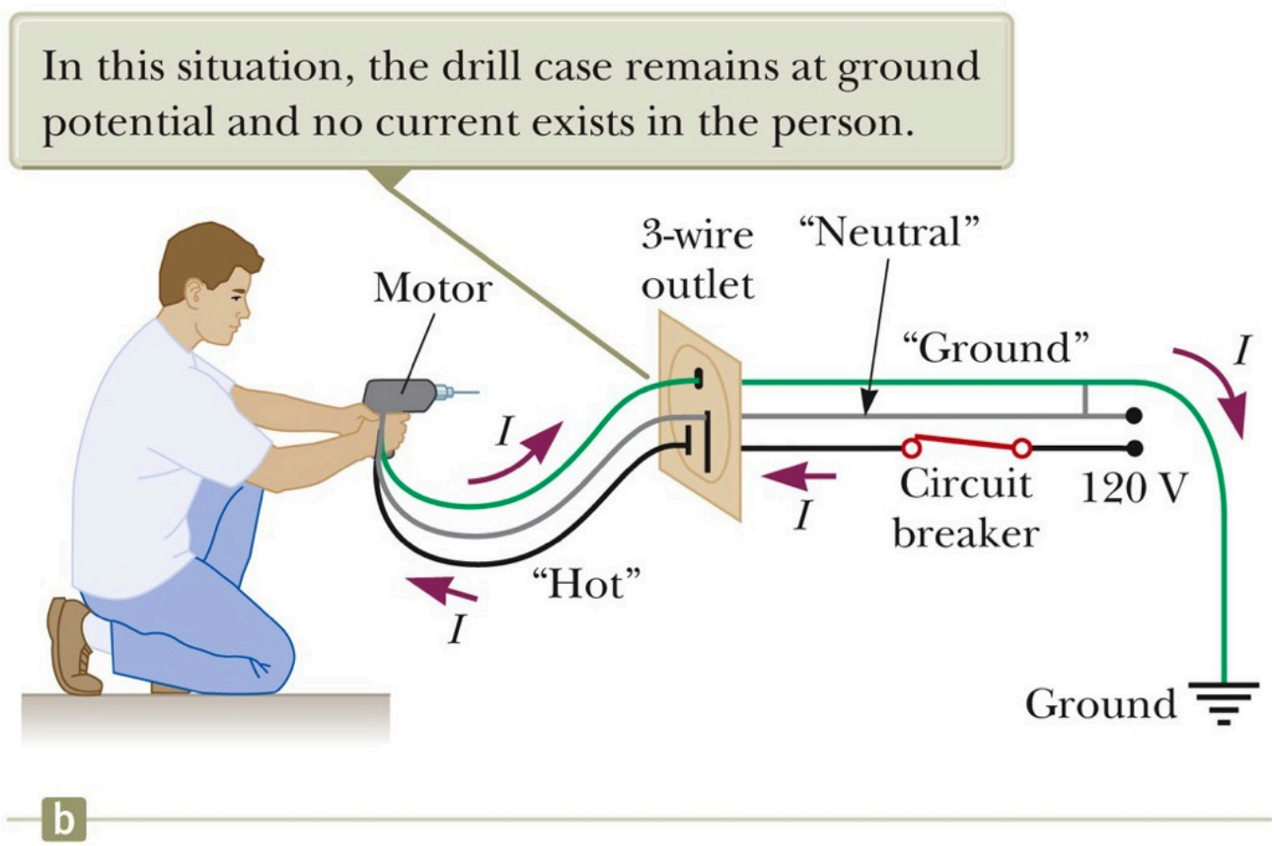

Ground-Fault Interrupters (GFI)

- Special power outlets
- Used in hazardous areas
- Designed to protect people from electrical shock
- Senses currents (< 5 mA) leaking to ground
- Quickly shuts off the current when above this level
- **you always want to install a GFI near a source of water like a sink**

Electrical Safety

Electric shock can result in fatal burns.

Electric shock can cause the muscles of vital organs (such as the heart) to malfunction.

The degree of damage depends on:

- The magnitude of the current
- The length of time it acts
- The part of the body touched by the live wire
- The part of the body in which the current exists

I'm avoiding the gruesome photos but google it.

Effects of Various Currents

5 mA or less
- Can cause a sensation of shock
- Generally little or no damage

10 mA
- Muscles contract
- May be unable to let go of a live wire

100 mA
- If passing through the body for a few seconds, can be fatal
- Paralyzes the respiratory muscles and prevents breathing

In some cases, currents of 1 A can produce serious burns.
- Sometimes these can be fatal burns

No contact with live wires is considered safe whenever the voltage is greater than 24 V.

Example Problem #7

38. **W** Consider a series RC circuit as in Figure P28.38 for which $R = 1.00\ \text{M}\Omega$, $C = 5.00\ \mu\text{F}$, and $\mathcal{E} = 30.0\ \text{V}$. Find (a) the time constant of the circuit and (b) the maximum charge on the capacitor after the switch is thrown closed. (c) Find the current in the resistor 10.0 s after the switch is closed.

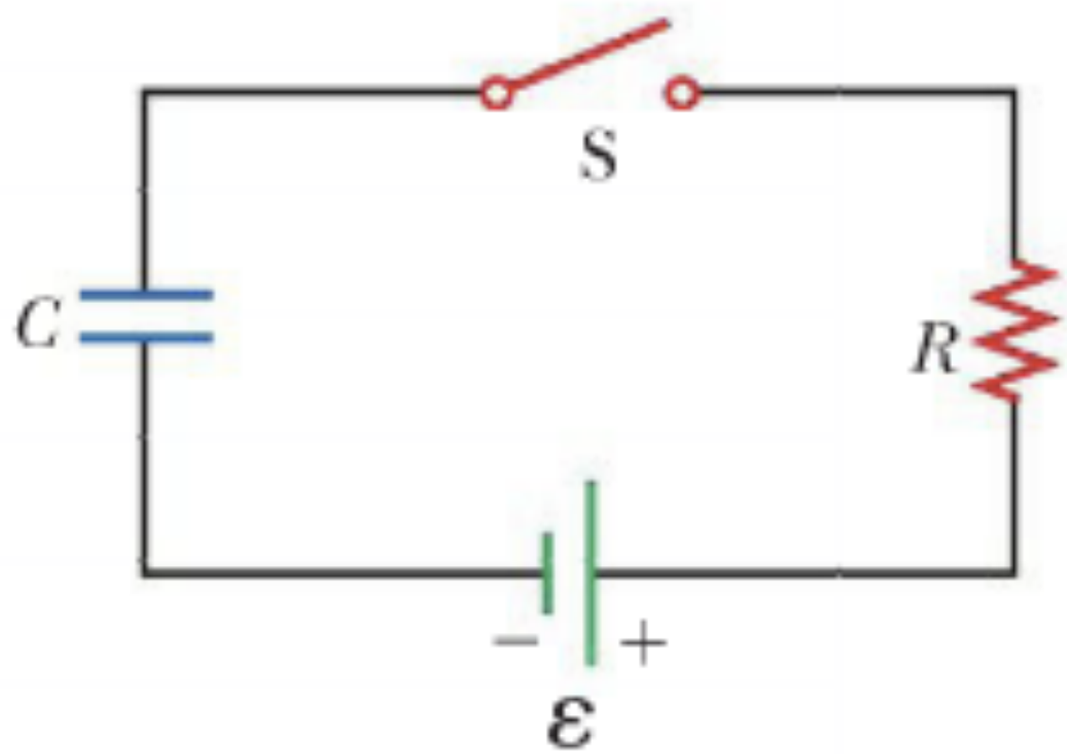

Example Problem #7: Solution

(a) The time constant is

$$RC = \left(1.00 \times 10^{6}\ \Omega\right)\left(5.00 \times 10^{-6}\ \text{F}\right) = \boxed{5.00\ \text{s}}$$

(b) After a long time interval, the capacitor is "charged to thirty volts," separating charges of

$$Q = C\mathcal{E} = \left(5.00 \times 10^{-6}\ \text{C}\right)\left(30.0\ \text{V}\right) = \boxed{150\ \mu\text{C}}$$

(c)
$$I(t) = \frac{\mathcal{E}}{R} e^{-t/RC} = \left(\frac{30.0\ \text{V}}{1.00 \times 10^{6}\ \Omega}\right) \exp\left[\frac{-10.0\ \text{s}}{\left(1.00 \times 10^{6}\ \Omega\right)\left(5.00 \times 10^{-6}\ \text{F}\right)}\right]$$

$$= \boxed{4.06\ \mu\text{A}}$$

Example Problem #8

53. The circuit in Figure P28.53 has been connected for several seconds. Find the current (a) in the 4.00-V bat-

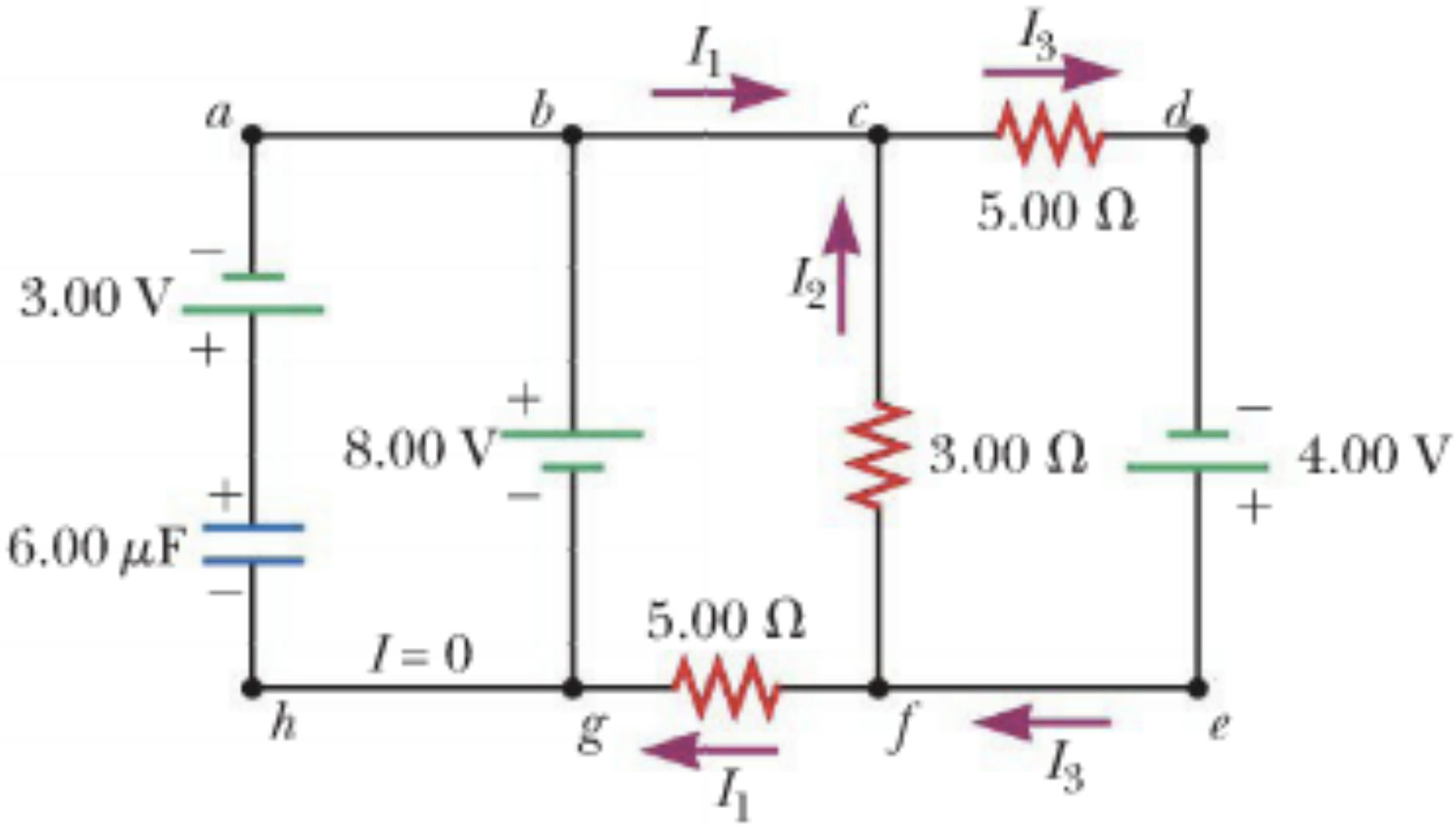

tery, (b) in the 3.00-Ω resistor, (c) in the 8.00-V battery, and (d) in the 3.00-V battery. (e) Find the charge on the capacitor.

Example Problem #8: Solution

Several seconds is many time constants, so the capacitor is fully charged and (d) the current in its branch is $\boxed{\text{zero.}}$

For the center loop, Kirchhoff's loop rule gives

$$+8 + (3\ \Omega)\ I_2 - (5\ \Omega) I_1 = 0$$

or $$I_1 = 1.6 + 0.6 I_2$$

For the right-hand loop, Kirchhoff's loop rule gives

$$+4\ \text{V} - (3\ \Omega)\ I_2 - (5\ \Omega)\ I_3 = 0$$

or $$I_3 = 0.8 - 0.6 I_2$$

For the top junction, Kirchhoff's junction rule gives

$$+ I_1 + I_2 - I_3 = 0$$

Now we eliminate I_1 and I_3 by substituting [1] and [2] into [3]. Suppressing units,

$$1.6 + 0.6 I_2 + I_2 - 0.8 + 0.6 I_2 = 0 \ \rightarrow\ I_2 = -0.8/2.2 = -0.3636$$

Example Problem #8: Solution

(b) $\boxed{\text{The current in 3 } \Omega \text{ is 0.364 A down.}}$

(a) Now, from [2], we find $I_3 = 0.8 - 0.6(-0.364) = \boxed{\text{1.02 A down in 4 V and in 5 } \Omega}$.

(c) From [1] we have $I_1 = 1.6 + 0.6(-0.364) = \boxed{\text{1.38 A up in the 8 V battery}}$.

(e) For the left loop $+3\text{ V} - (Q/6\ \mu\text{F}) + 8\text{ V} = 0$, so $Q = (6\ \mu\text{F})\ (11\text{ V})$ $= \boxed{66.0\ \mu\text{C}}$

Example Problem #9

23. M The circuit shown in Figure P28.22 is connected for 2.00 min. (a) Determine the current in each branch of the circuit. (b) Find the energy delivered by each battery. (c) Find the energy delivered to each resistor. (d) Identify the type of energy storage transformation that occurs in the operation of the circuit. (e) Find the total amount of energy transformed into internal energy in the resistors.

f. Explain what is happening to both batteries in this circuit

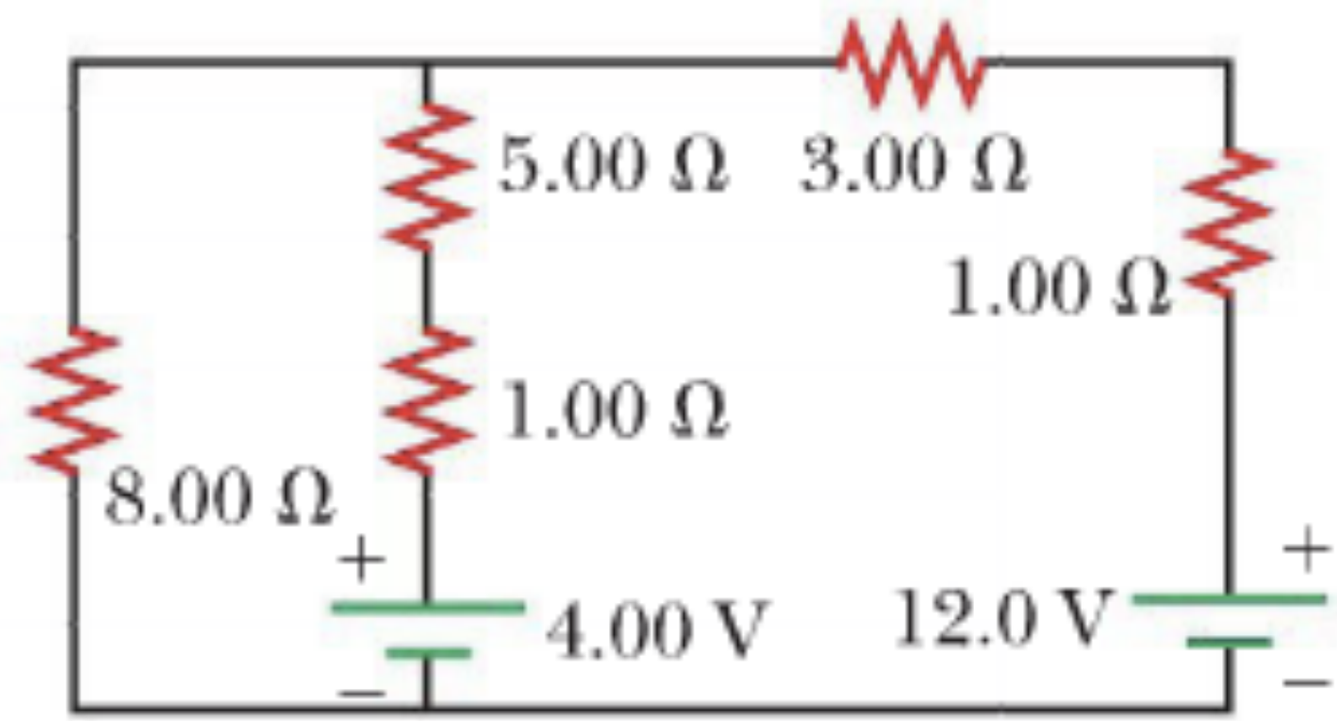

Example Problem #9: Solution

We name currents I_1, I_2, and I_3 as shown in ANS. FIG. P28.23. From Kirchhoff's current rule, $I_3 = I_1 + I_2$.

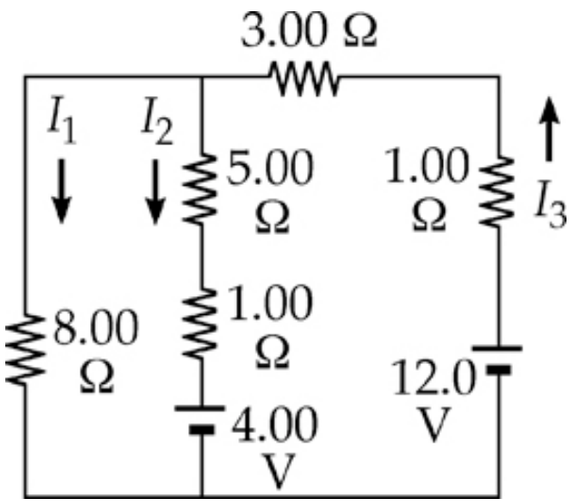

ANS. FIG. P28.23

Applying Kirchhoff's voltage rule to the loop containing I_2 and I_3,

$$12.0\text{ V} - (4.00\ \Omega)I_3 - (6.00\ \Omega)I_2 - 4.00\text{ V} = 0$$

$$8.00 = (4.00)I_3 + (6.00)I_2$$

Applying Kirchhoff's voltage rule to the loop containing I_1 and I_2,

$$-(6.00\ \Omega)I_2 - 4.00\text{ V} + (8.00\ \Omega)I_1 = 0$$

or $$(8.00\ \Omega)I_1 = 4.00 + (6.00\ \Omega)I_2$$

Example Problem #9: Solution

Solving the above linear system (by substituting $I_1 + I_2$ for I_3), we proceed to the pair of simultaneous equations:

$$\begin{cases} 8 = 4I_1 + 4I_2 + 6I_2 \\ 8I_1 = 4 + 6I_2 \end{cases} \quad \text{or} \quad \begin{cases} 8 = 4I_1 + 10I_2 \\ I_2 = \dfrac{4}{3}I_1 - \dfrac{2}{3} \end{cases}$$

and to the single equation

$$8 = 4I_1 + 10\left(\frac{4}{3}I_1 - \frac{2}{3}\right) = \frac{52}{3}I_1 - \frac{20}{3}$$

which gives

$$I_1 = \frac{3}{52}\left(8 + \frac{20}{3}\right) = 0.846 \text{ A}$$

Then $$I_2 = I_2 = \frac{4}{3}(0.846) - \frac{2}{3} = 0.462$$

and $$I_3 = I_1 + I_2 = 1.31 \text{ A}$$

give $$\boxed{I_1 = 846 \text{ mA}, I_2 = 462 \text{ mA}, I_3 = 1.31 \text{ A}}$$

Example Problem #9: Solution

(a) The results are: 0.846 A down in the 8.00-Ω resistor; 0.462 A down in the middle branch; 1.31 A up in the right-hand branch.

(b) For 4.00-V battery:

$$\Delta U = P\Delta t = (\Delta V)I\Delta t = (4.00\ \text{V})(-0.462\ \text{A})(120\ \text{s}) = -222\ \text{J}$$

For 12.0-V battery:

$$\Delta U = (12.0\ \text{V})(1.31\ \text{A})(120\ \text{s}) = 1.88\ \text{kJ}$$

The results are: –222 J by the 4.00-V battery and 1.88 kJ by the 12.0-V battery.

(c) To the 8.00-Ω resistor:

$$\Delta U = I^2 R\Delta t = (0.846\ \text{A})^2(8.00\ \Omega)(120\ \text{s}) = \boxed{687\ \text{J}}$$

To the 5.00-Ω resistor:

$$\Delta U = (0.462\ \text{A})^2(5.00\ \Omega)(120\ \text{s}) = \boxed{128\ \text{J}}$$

Example Problem #9: Solution

To the 1.00-Ω resistor in the center branch:

$$(0.462\ \text{A})^2(1.00\ \Omega)(120\ \text{s}) = \boxed{25.6\ \text{J}}$$

To the 3.00-Ω resistor:

$$(1.31\ \text{A})^2(3.00\ \Omega)(120\ \text{s}) = \boxed{616\ \text{J}}$$

To the 1.00-Ω resistor in the right-hand branch:

$$(1.31\ \text{A})^2(1.00\ \Omega)(120\ \text{s}) = \boxed{205\ \text{J}}$$

(d) Chemical energy in the 12.0-V battery is transformed into internal energy in the resistors. The 4.00-V battery is being charged, so its chemical potential energy is increasing at the expense of some of the chemical potential energy in the 12.0-V battery.

(e) Either sum the results in part (b): –222 J + 1.88 kJ = 1.66 kJ,

or in part (c): 687 J + 128 J + 25.6 J + 616 J +205 J = 1.66 kJ

The total amount of energy transformed is $\boxed{1.66\ \text{kJ}}$.

(f) the current is in the direction of the 12 V battery, so it discharges. While it is in the opposite direction of the 4 V battery, which then charges.

Example Problem #10

43. M The circuit in Figure P28.43 has been connected for a long time. (a) What is the potential difference across the capacitor? (b) If the battery is disconnected from the circuit, over what time interval does the capacitor discharge to one-tenth its initial voltage?

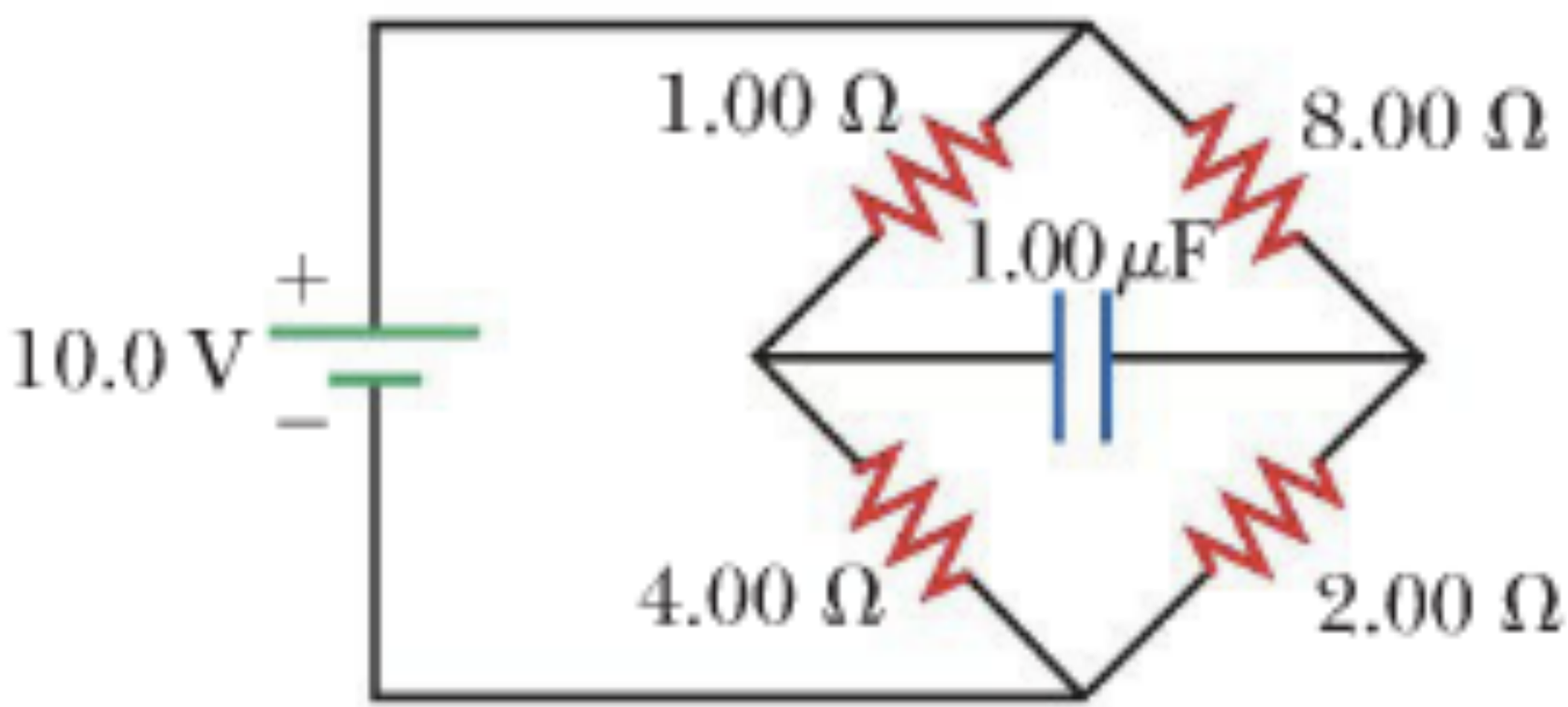

Example Problem #10: Solution

(a) Call the potential at the left junction V_L and at the right V_R. After a "long" time, the capacitor is fully charged.

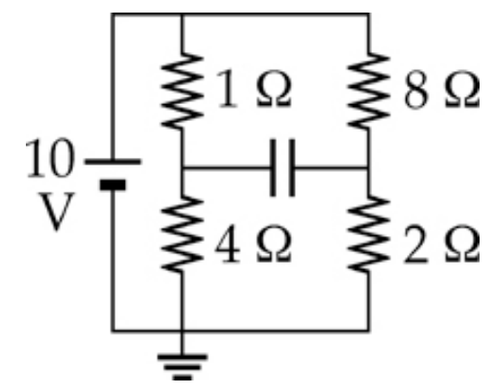

ANS. FIG. P28.43(a)

$$I_L = \frac{10.0\ \text{V}}{5.00\ \Omega} = 2.00\ \text{A}$$

$$V_L = 10.0\ \text{V} - (2.00\ \text{A})(1.00\ \Omega) = 8.00\ \text{V}$$

$$I_R = \frac{10.0\ \text{V}}{10.0\ \Omega} = 1.00\ \text{A}$$

$$V_R = (10.0\ \text{V}) - (8.00\ \Omega)(1.00\ \text{A}) = 2.00\ \text{V}$$

Therefore, $\Delta V = V_L - V_R = 8.00 - 2.00 = \boxed{6.00\ \text{V}}$

Example Problem #10: Solution

(b) We suppose the battery is pulled out leaving an open circuit. We are left with ANS. FIG. P28.43(b), which can be reduced to the equivalent circuits shown in ANS. FIG. P28.43(c) and ANS. FIG. P28.43(d). From ANS. FIG. P28.43(d), we can see that the capacitor discharges through a 3.60-Ω equivalent resistance.

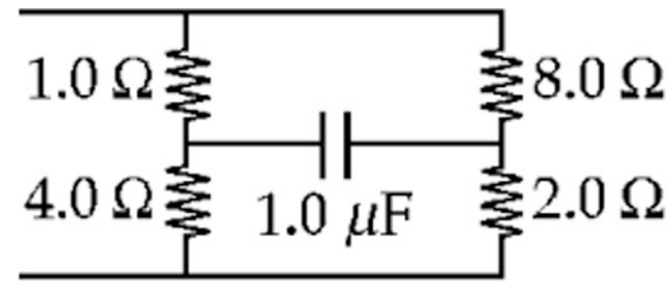

ANS. FIG. P28.43(b)

According to $q = Qe^{-t/RC}$,

we calculate that $qC = QCe^{-t/RC}$

and $\Delta V = \Delta V_i e^{-t/RC}$.

We proceed to solve for *t:*

$$\frac{\Delta V}{\Delta V_i} = e^{-t/RC} \quad \text{or} \quad \frac{\Delta V_i}{\Delta V} = e^{+t/RC}$$

Take natural logarithms of both sides:

$$\ln\left(\frac{\Delta V_i}{\Delta V}\right) = t / RC$$

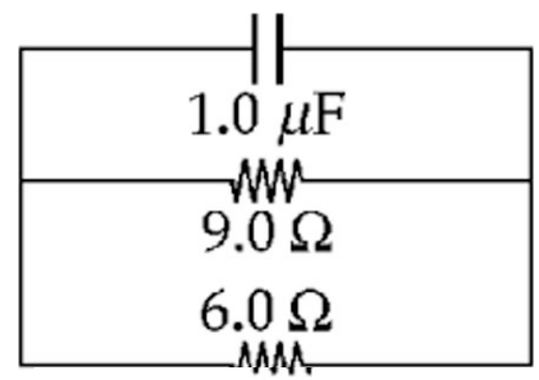

ANS. FIG. P28.43(c)

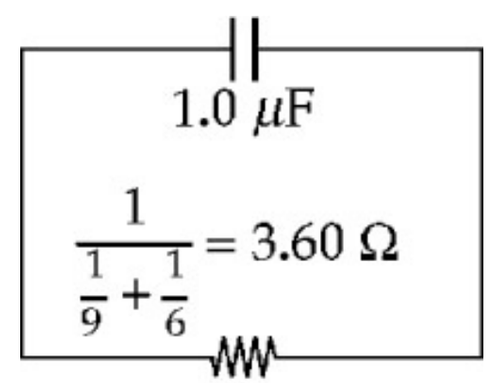

ANS. FIG. P28.43(d)

so $$t = RC\ln\left(\frac{\Delta V_i}{\Delta V}\right) = (3.60\ \Omega)(1.00\times10^{-6}\ \text{F})\ln\left(\frac{\Delta V_i}{0.100\Delta V_i}\right) = (3.60\times10^{-6}\ \text{s})\ln 10 = \boxed{8.29\ \mu\text{s}}$$